AX2022P

Passive Vertical Array Loudspeaker

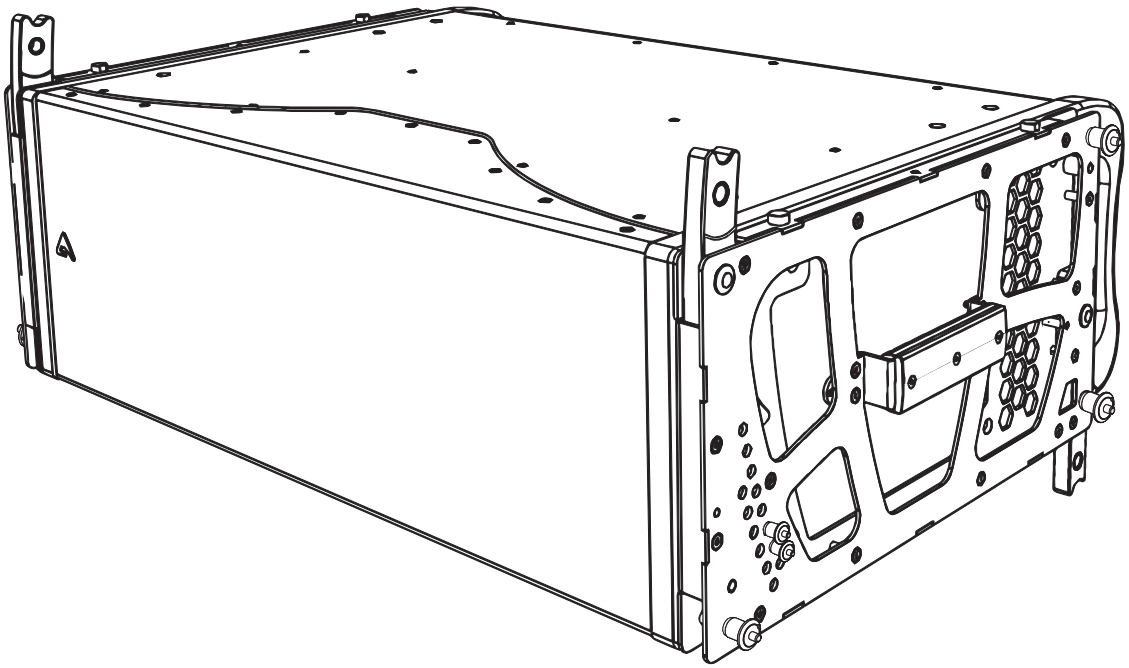

USER MANUAL

revision 2026-10-31

AXIOM

IMPORTANT SAFETY INSTRUCTIONS

Watch for these symbols:

The lightning flash with arrowhead symbol within an equilateral triangle is intended to alert the user to the presence of uninsulated "dangerous voltage" within the product's enclosure, that may be of sufficient magnitude to constitute a risk of electric shock to persons.

The exclamation point within an equilateral triangle is intended to alert the user to the presence of important operating and maintenance (servicing) instructions in the literature accompanying the appliance.

1. Read these instructions.
2. Keep these instructions.
3. Heed all warnings.
4. Follow all instructions.
5. Do not use this apparatus near water.
6. Clean only with dry cloth.
7. Do not block any ventilation openings. Install in accordance with the manufacturer's instructions.
8. Do not install near any heat sources such as radiators, heat registers, stoves, or other apparatus (including amplifiers) that produce heat.
9. Do not defeat the safety purpose of the polarized or grounding-type plug. A polarized plug has two blades with one wider than the other. A grounding-type plug has two blades and a third grounding prong. The wide blade or the third prong are provided for your safety. If the provided plug does not fit into your outlet, consult an electrician for replacement of the obsolete outlet.
10. Protect the power cord from being walked on or pinched, particularly at plugs, convenience receptacles, and the point where they exit from the apparatus.



11. Only use attachments/accessories specified by the manufacturer.
12. Use only with the cart, stand, tripod, bracket, or table specified by the manufacturer, or sold with the apparatus. When a cart is used, use caution when moving the cart/apparatus combination to avoid injury from tip-over.
13. Unplug this apparatus during lightning storms or when unused for long periods of time.
14. Refer all servicing to qualified service personnel. Servicing is required when the apparatus has been damaged in any way, such as power supply cord or plug is damaged, liquid has been spilled or objects have fallen into the apparatus, the apparatus has been exposed to rain or moisture, does not operate normally, or has been dropped.
15. Warning: to reduce the risk of fire or electric shock, do not expose this apparatus to rain or moisture.
16. Do not expose this equipment to dripping or splashing and ensure that no objects filled with liquids, such as vases, are placed on the equipment.
17. To completely disconnect this apparatus from the ac mains, disconnect the power supply cord plug from the ac receptacle.
18. The mains plug of the power supply cord shall remain readily operable.
19. This apparatus contains potentially lethal voltages. To prevent electric shock or hazard, do not remove the chassis, input module or ac input covers. No user serviceable parts inside. Refer servicing to qualified service personnel.
20. The loudspeakers covered by this manual are not intended for high moisture outdoor environments. Moisture can damage the speaker cone and surround and cause corrosion of electrical contacts and metal parts. Avoid exposing the speakers to direct moisture.
21. Keep loudspeakers out of extended or intense direct sunlight. The driver suspension will prematurely dry out and finished surfaces may be degraded by long-term exposure to intense ultra-violet (UV) light.
22. The loudspeakers can generate considerable energy. When placed on a slippery surface such as polished wood or linoleum, the speaker may move due to its acoustical energy output.
23. Precautions should be taken to assure that the speaker does not fall off a stage or table on which it is placed.
24. The loudspeakers are easily capable of generating sound pressure levels (SPL) sufficient to cause permanent hearing damage to performers, production crew and audience members. Caution should be taken to avoid prolonged exposure to SPL in excess of 90 dB.





This marking shown on the product or its literature, indicates that it should not be disposed with other household wastes at the end of its working life. To prevent possible harm to the environment or human health from uncontrolled waste disposal, please separate this from other types of wastes and recycle it responsibly to promote the sustainable reuse of material resources. Household users should contact either the retailer where they purchased this product, or their local government office, for details of where and how they can take this item for environmentally safe recycling. Business users should contact their supplier and check the terms and conditions of the purchase contract. This product should not be mixed with other commercial wastes for disposal.

DECLARATION OF CONFORMITY

The product is in compliance with: RoHS Directive 2011/65/EU and 2015/863/EU, WEEE Directive 2012/19/EU.

The product is in compliance with:
S.I. 2012/3032 The Restriction of the Use of Certain Hazardous Substances in Electrical and Electronic Equipment Regulations 2012

LIMITED WARRANTY

Proel warrants all materials, workmanship and proper operation of this product for a period of two years from the original date of purchase. If any defects are found in the materials or workmanship or if the product fails to function properly during the applicable warranty period, the owner should inform about these defects the dealer or the distributor, providing receipt or invoice of date of purchase and defect detailed description. This warranty does not extend to damage resulting from improper installation, misuse, neglect or abuse. Proel S.p.A. will verify damage on returned units, and when the unit has been properly used and warranty is still valid, then the unit will be replaced or repaired. Proel S.p.A. is not responsible for any “direct damage” or “indirect damage” caused by product defectiveness.

- This unit package has been submitted to ISTA 1A integrity tests. We suggest you control the unit conditions immediately after unpacking it.
- If any damage is found, immediately advise the dealer. Keep all unit packaging parts to allow inspection.
- Proel is not responsible for any damage that occurs during shipment.
- Products are sold “delivered ex warehouse” and shipment is at charge and risk of the buyer.
- Possible damages to unit should be immediately notified to forwarder. Each complaint for package tampered with should be done within eight days from product receipt.

CONDITIONS OF USE

Proel do not accept any liability for damage caused to third parties due to improper installation, use of non-original spare parts, lack of maintenance, tampering or improper use of this product, including disregard of acceptable and applicable safety standards. Proel strongly recommends that this loudspeaker cabinet be suspended taking into consideration all current National, Federal, State and Local regulations. The product must be installed be qualified personal. Please contact the manufacturer for further information.

INDEX

INTRODUCTION 4
TECHNICAL SPECIFICATIONS 4
MECHANICAL DRAWING 5
OPTIONAL ACCESSORIES 5
SPARE PARTS (AX2022P) 5
INPUT 6
PREDICTION SOFTWARE: EASE FOCUS 3 7
ATTACHING THE AXSKATE2022B 8
COUPLING AX2022 UNITS FOR TRANSPORT 10
AIMING AND SUSPENDING INSTRUCTIONS 12
KPTAX2022 FLYING BAR AND ACCESSORIES 12
KPTAX2022 FLYING BAR REVERSAL 13
KPTAX2022 FLYING BAR ASSEMBLY SEQUENCE 14
SETTING SPLAY ANGLES BETWEEN AX2022 UNITS 16
KPTAX2022 - AX2022 FLOWN ARRAY ASSEMBLY 19
KPTAX2022 - SW2421CFP - AX2022P ASSEMBLY 22
KPTAX2022 - AX2022P STACKED DEPLOYMENT 25
SW2421CFP – AX2022P STACKED DEPLOYMENT 30
PROCESSING PRESETS 34
AMPLIFICATION 36
SYSTEM DESIGN, CONTROL AND MONITORING 37

INTRODUCTION

The Axiom AX2022P is a high-output dual 10-inch line array module engineered to maximize acoustic performance within an exceptionally compact form factor. Delivering the highest power-to-size ratio in the Axiom portfolio, it provides the projection, SPL capability, and coverage consistency typically associated with larger-format systems while retaining the versatility required for both touring productions and permanent installations.

The system employs a three-way fully passive transducer architecture centered around a coaxial compression driver coupled to an advanced waveguide. This design enables controlled directivity to extend well beyond the high-frequency range and into the midband, improving acoustic loading through the critical vocal spectrum. The result is enhanced sensitivity, lower distortion, and increased speech intelligibility, even at elevated output levels. Complementing the HF/MF section are two high-performance 10-inch transducers optimized for mid- and low-frequency reproduction, providing rapid transient response, high power handling, and stable performance under continuous operation. Careful enclosure tuning and phase alignment ensure coherent wavefront summation and controlled low-frequency behavior across the operating bandwidth.

Constructed from phenolic birch plywood, the AX2022P enclosure is designed to meet the mechanical demands of professional sound reinforcement environments. A second-generation directive control system reduces rear-radiated energy, minimizing acoustic interactions with reflective surfaces and adjacent array elements. This contributes to improved pattern control, greater array consistency, and more uniform frequency response throughout the listening area.

By maintaining a balanced tonal signature from near-field to far-field audience positions, the AX2022P preserves both vocal accuracy and musical detail across large venues. The controlled directivity characteristics also reduce the need for extensive corrective equalization, simplifying system optimization and improving deployment efficiency for system engineers.

For amplification and processing, the AX2022P integrates seamlessly with Axiom's Q-Nex amplifier platform, leveraging dedicated DSP algorithms, comprehensive loudspeaker protection, and scalable power management. This optimized ecosystem ensures predictable performance, consistent voicing, and repeatable deployment results across a wide range of applications and operating conditions. The combination of advanced transducer technology, sophisticated directivity control, and integrated system processing makes the AX2022P a highly efficient solution for demanding professional audio applications where maximum performance is required from a minimal physical footprint.

TECHNICAL SPECIFICATIONS

SYSTEM

System Acoustic Principle	Line Array Element, LF Transmission Line, Broadband directivity control
Frequency Response (-6 dB)	65 Hz – 18 kHz (Processed)
Horizontal Coverage	100° deg Avg., from 400 Hz to 18 kHz; 160° Avg. from 65 Hz to 400 Hz
Vertical Coverage	Array Size dependent
Sensitivity 2.83 V	98 dB SPL @ 1m (LF) - 114 dB SPL @ 1 m (HF)
Maximum (peak) Output	146 dB SPL (AES 75 Standard)

TRANSDUCERS

LF	Two 10"(260 mm) Dual Gap, 3.5" (88 mm) ISV, Neodymium Woofers, 16 Ω each, paralleled
HF	Two 1.4", two way, Coaxial Neodymium driver, 3" (64 mm) midrange voice coil, 2" (51 mm) high voice coil, 16 Ω each, paralleled

INPUT CONNECTORS

Connector Type	Neutrik® speakON™ NL4MP x 2
Input Wiring	LF = Pin 1+/1- HF = Pin 2+/2-
POWER HANDLING	
Input Power Rating (AES)	1600 W LF + 280 W MHF
Input Power Handling (Program)	3200 W LF + 560 W MHF
ENCLOSURE & CONSTRUCTION	
Dimensions (W x H x D)	942 mm (W) x 295 mm (H) x 650 mm (D)
Enclosure Material	15/30mm, reinforced Phenolic Birch
Paint	High-resistance, water based paint
Flying System	External Frame suspension system, rear hinge
Net Weight	55 kg (121.3 lbs.)

MECHANICAL DRAWING

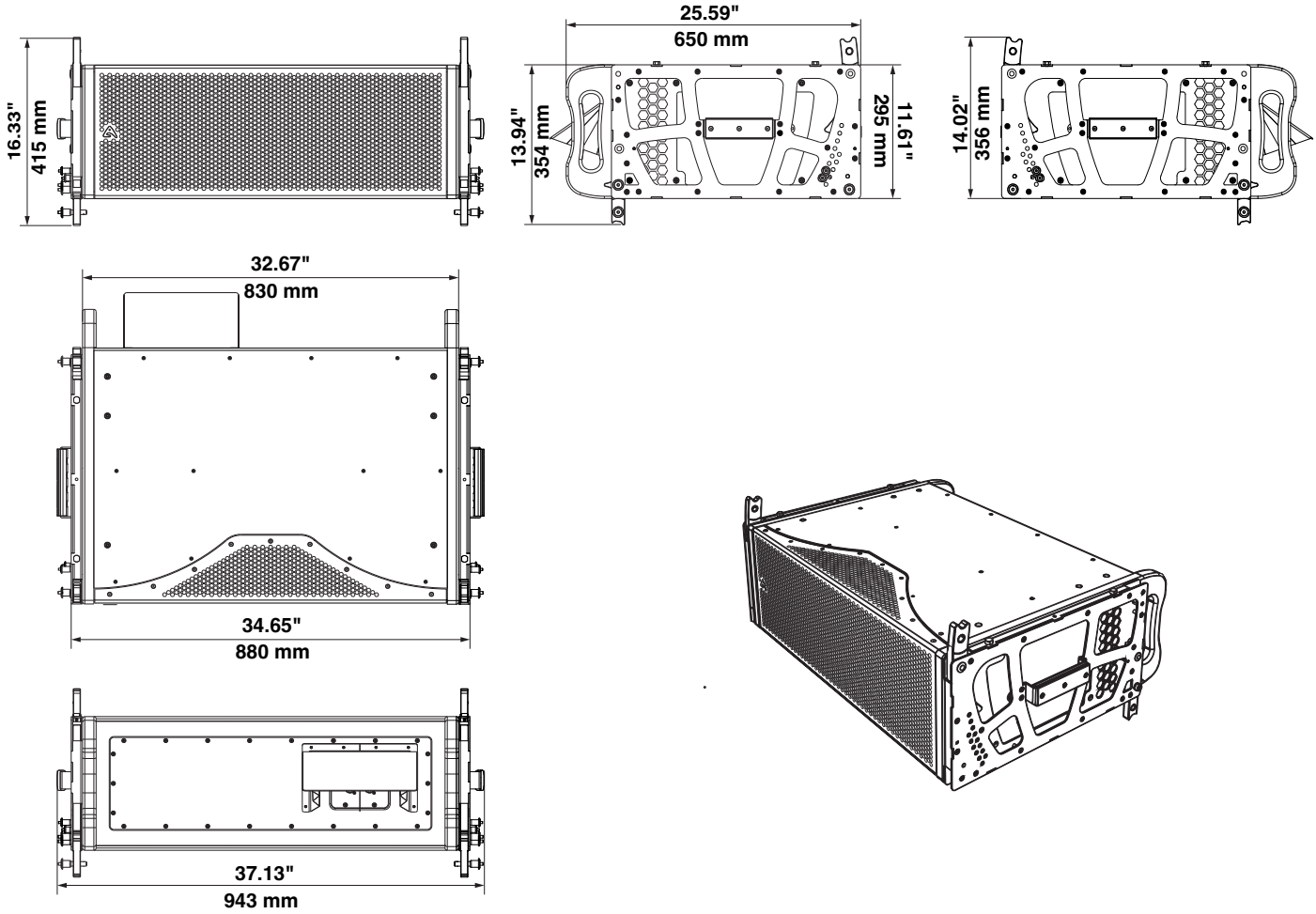

OPTIONAL ACCESSORIES

AXSKATE2022B	Bottom skate AX2022
COVERAX2022ST4	Protective cover for 4 units
KPTAX2022	Flying bar AX2022 / SW2421CF

*see **http://www.axiomproaudio.com/** for detailed descriptions and other available accessories.*

SPARE PARTS (AX2022P)

98DRI354W16	HF Coaxial Driver 16 Ω
98AXM222W16	10" Woofer 16 Ω
91CRO093	Passive Crossover for HF Coaxial Driver
93COV2022	Raincover with Velcro
95MET300250	Quick release Pin 8 mm TYPE A
95MET300251	Quick release Pin 10 mm PIN H34,5
95MET300252	Quick release Pin 8 mm TYPE B

INPUT
Power input for the external amplifier.

INPUT - LINK	
NL4 pin number	**internal connection**
1+	**LF +**
1-	**LF -**
2+	**HF +**
2-	**HF -**



WARNING!
AX2022P is designed to be amplified using exclusively the two dedicated presets for the LF and HF transducers. To ensure performance according to specifications and avoid possible damage, do not operate the unit unless both channels are driven and each processed using its dedicated preset.

LINK
Power output in parallel with the INPUT socket for connection to another **AX2022P** unit.

WARNING!
To ensure performance according to specifications and avoid possible damage, the parallel LINK output should be used exclusively to connect another AX2022P unit(s). As each of the two amplified signals is specifically processed for combined use in AX2022P units, driving units of other makes or models in parallel with these will produce unpredictable results, highly degraded audio performance and possible damage.

WARNING! CAREFULLY READ THE FOLLOWING INSTRUCTIONS AND CONDITION OF USE:
• This loudspeaker is designed exclusively for Professional audio applications. The product must be installed by qualified personal only.
• Proel strongly recommends that this loudspeaker cabinet be suspended taking into consideration all current National, Federal, State and Local regulations. Please contact the manufacturer for further information.
• Proel will accept no liability for damage caused to third parties due to improper installation, lack of maintenance, tampering or improper use of this product, including disregard of acceptable and applicable safety standards.
• During installation, priority attention should be given to the possible risk of falling or toppling speaker enclosures and the dangers thus posed to persons and equipment. Wear suitable protective gear. Observe all instructions provided with the rigging components and the loudspeaker cabinets. When chain hoists are in operation, ensure that there is nobody directly underneath or in the vicinity of the load. Do not under any circumstances climb on the array.

PREDICTION SOFTWARE: EASE FOCUS 3

For proper aiming of a complete system, we always recommend the use of the Aiming Software - EASE Focus 3:
The EASE Focus 3 Aiming Software is a 3D Acoustic Modelling Software that serves for the configuration and modelling of Line Arrays and conventional speakers close to reality. It only considers the direct field, created by the complex addition of the sound contributions of the individual loudspeakers or array components.
The design of EASE Focus is targeted at the end user. It allows the easy and quick prediction of the array performance in a given venue. The scientific base of EASE Focus stems from EASE, the professional electro- and room acoustic simulation software developed by AFMG Technologies GmbH. It is based on the EASE GLL loudspeaker data file required for its use. The GLL file contains the data that defines the Line Array with regard to its possible configurations as well as to its geometrical and acoustical properties.

Download the EASE Focus 3 application, as well as the .GLL loudspeaker data file specific to the product from the AXIOM website at https://www.axiomproaudio.com/, clicking on 'Downloads' section of the product page.

Use the menu option **Edit / Import System Definition File** to import the **GLL** file. The detailed instructions to use the program are located in the menu option **Help / User's Guide**.

Note: Some windows systems will require the .NET Framework 4 that can be download from website at https://focus.afmg.eu/.

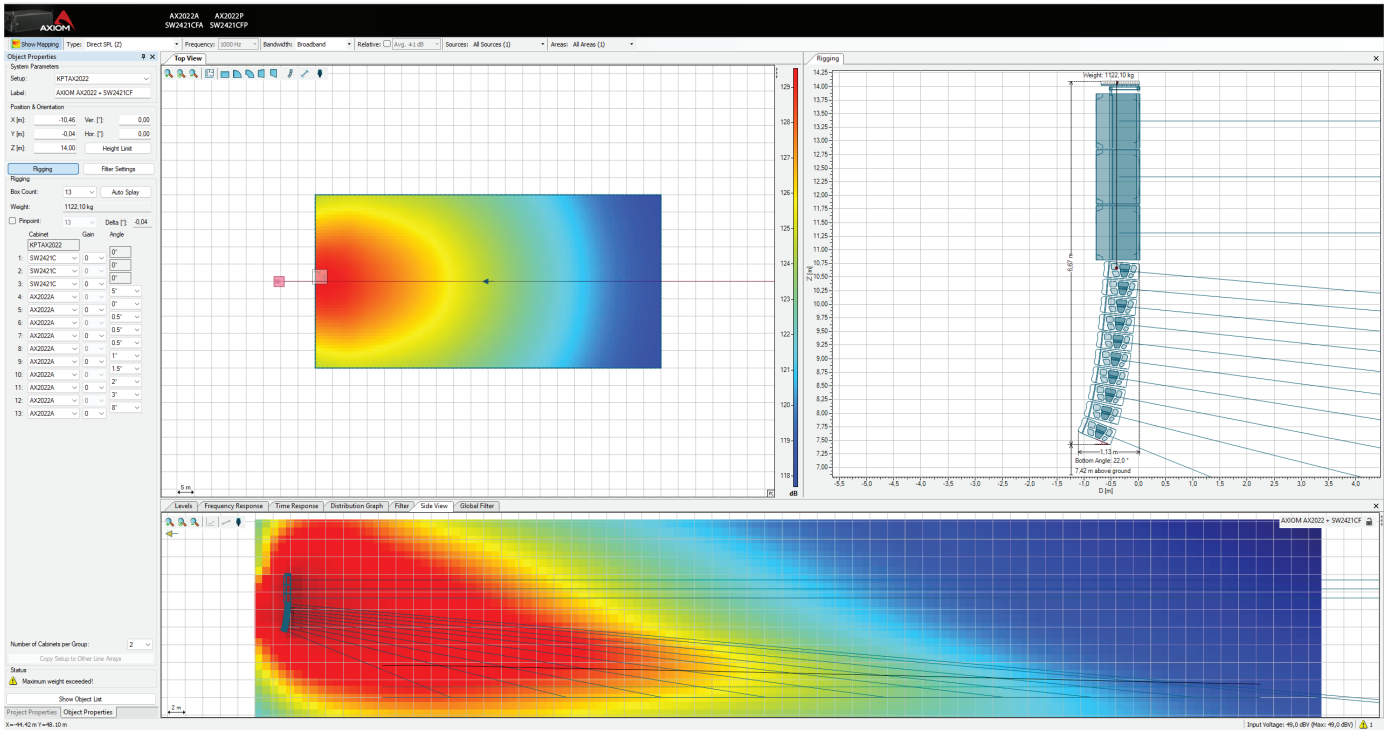

ATTACHING THE AXSKATE2022B

The AXSKATE2022B supports up to four (4) AX2022 units and greatly facilitates transportation, handling and pre-rigging in flown installations.
To attach the bottom AX2022 unit to the skate, use the following procedure.
If the rear extendable coupling lugs on each side of the bottom AX2022 are in the retracted position, remove the pins that retain these and extend the lugs completely **(1)**. Next, lock the lugs in the deployed position by replacing the pins **(2)**.
Remove also the locking pins from the bottom front lugs of the speaker **(3)**.
Lower the AX2022 onto the skate, carefully aligning the four pairs of lugs so the front male lugs on the skate enter the female lugs on the bottom of the enclosure and the rear male lugs on the enclosure enter the female lugs on the skate **(4)**.

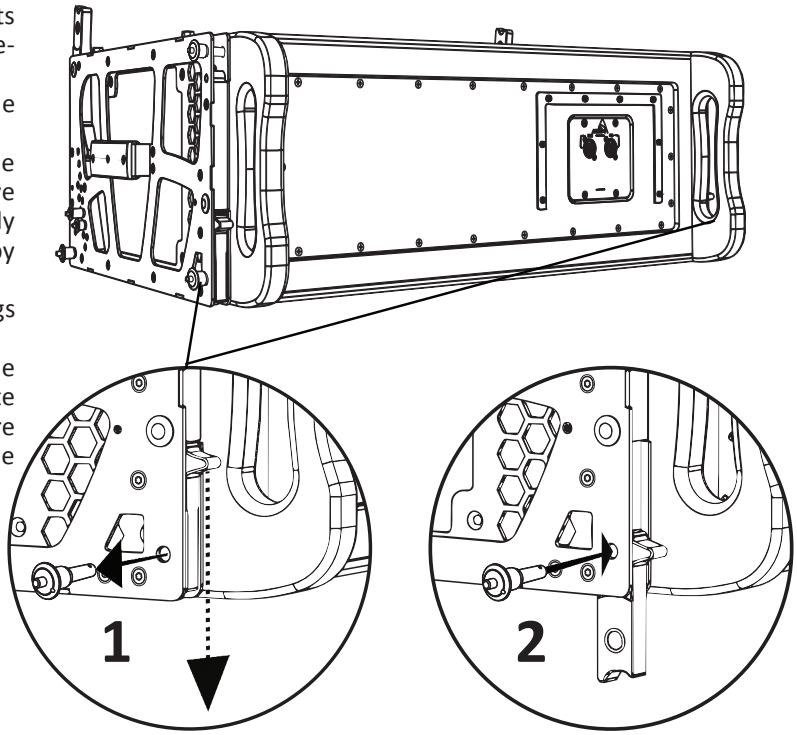

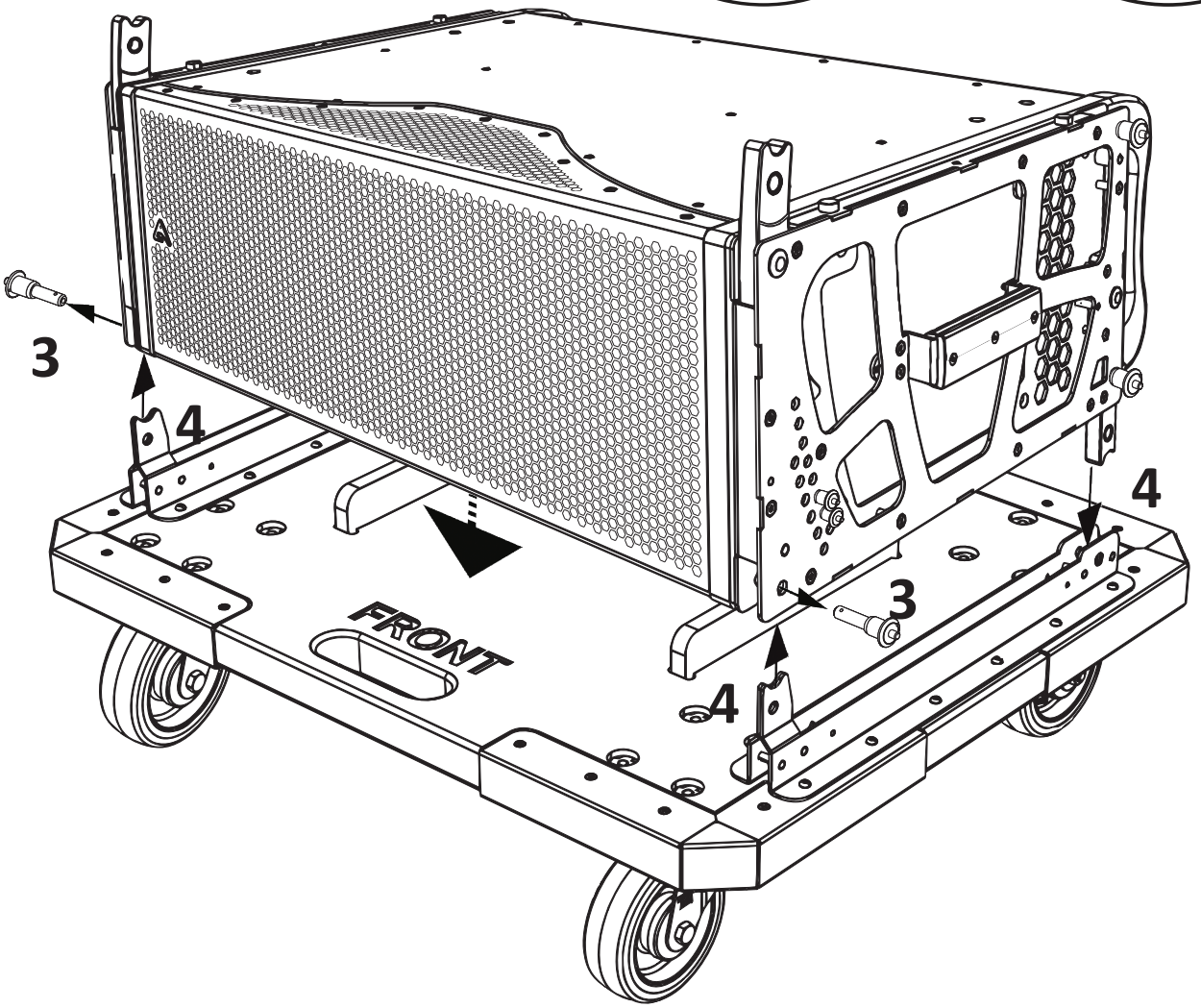

ATTACHING THE AXSKATE2022B (continued)

When all four pairs of lugs are mated, re-insert the pins through each set of mated lugs at the rear **(5)** and front **(6)** of the enclosure, assuring that each pin is securely locked and cannot be removed without pressing the release. When all of the couplings are secure, further AX2022 units can be added.

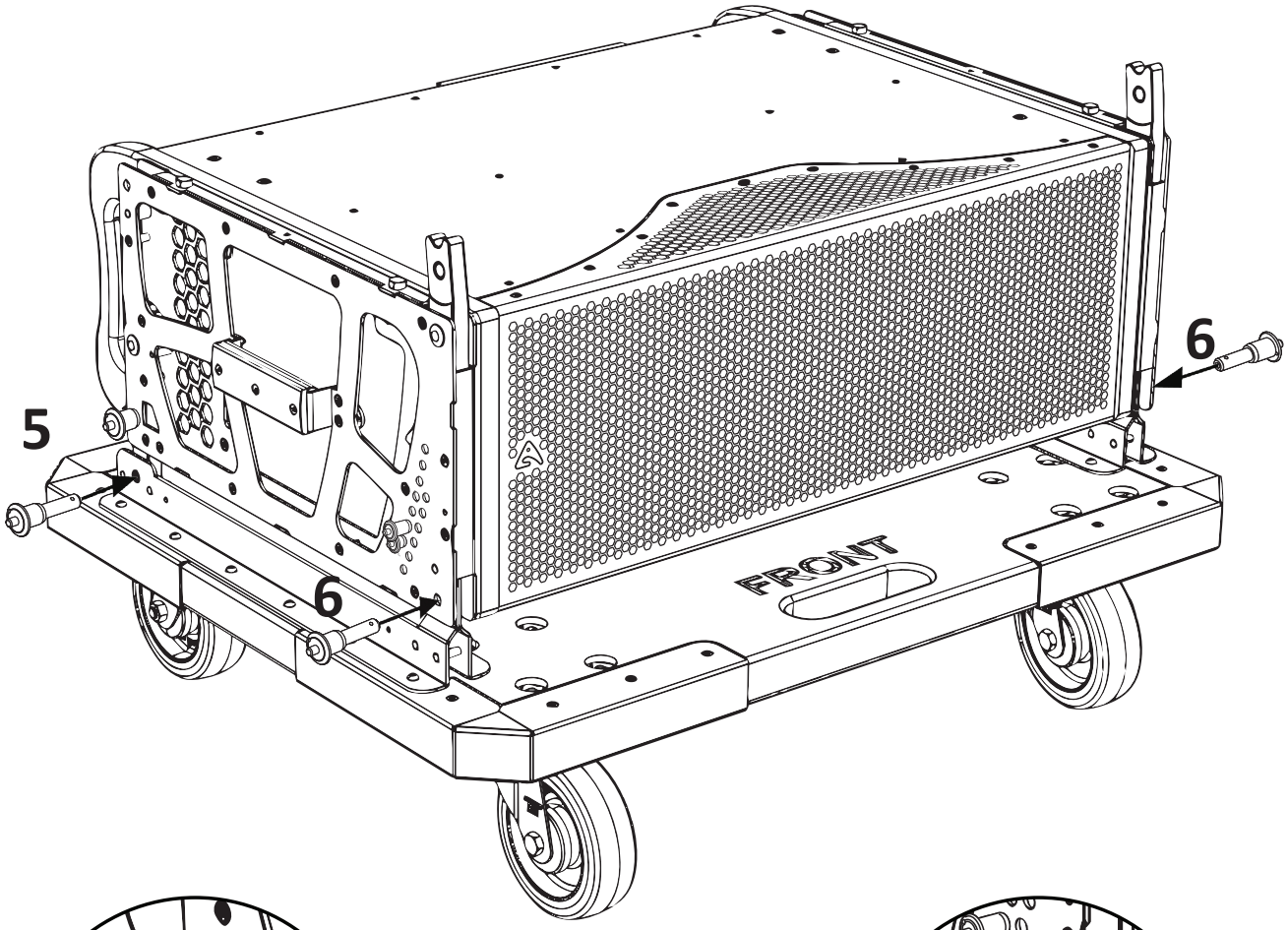

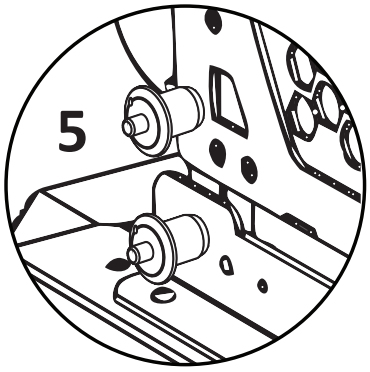

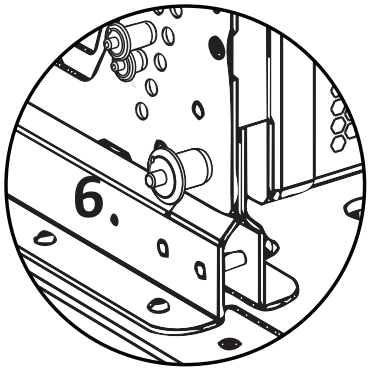

The AXSKATE2022B skate must be detached before hoisting. This can be done simply by reversing the above procedure and removing the four locking pins as the equipped enclosure is hoisted.

WARNING!
Do not attempt to fly the any AX2022 unit with the skate attached. AXSKATE2022B is not designed to be suspended by its lugs and could create a danger to persons and equipment below. Doing so would also effect the weight and the center of gravity of any flown speaker(s).

COUPLING AX2022 UNITS FOR TRANSPORT AND PRE-RIGGING

AX2022 units can be coupled one to the other following a similar procedure to attaching the skate.
Again, if the rear extendable coupling lugs on each side of the second AX2022 are in the retracted position, remove the pins that retain these and extend the lugs completely and lock the lugs in the deployed position by replacing the pins **(page 8)**.
Remove also the locking pins from the bottom front lugs of the speaker **(1)**.
Lower the successive AX2022 onto the previous AX2022, carefully aligning the four pairs of lugs so the front male lugs on the lower enclosure enter the female lugs on the bottom of the successive enclosure and the rear male lugs on the upper enclosure enter the female lugs on the lower enclosure **(2)**.

WARNING!
Take care that no hands, fingers, arms or other parts of the body ever enter the space between the two cabinets during this assembly process.

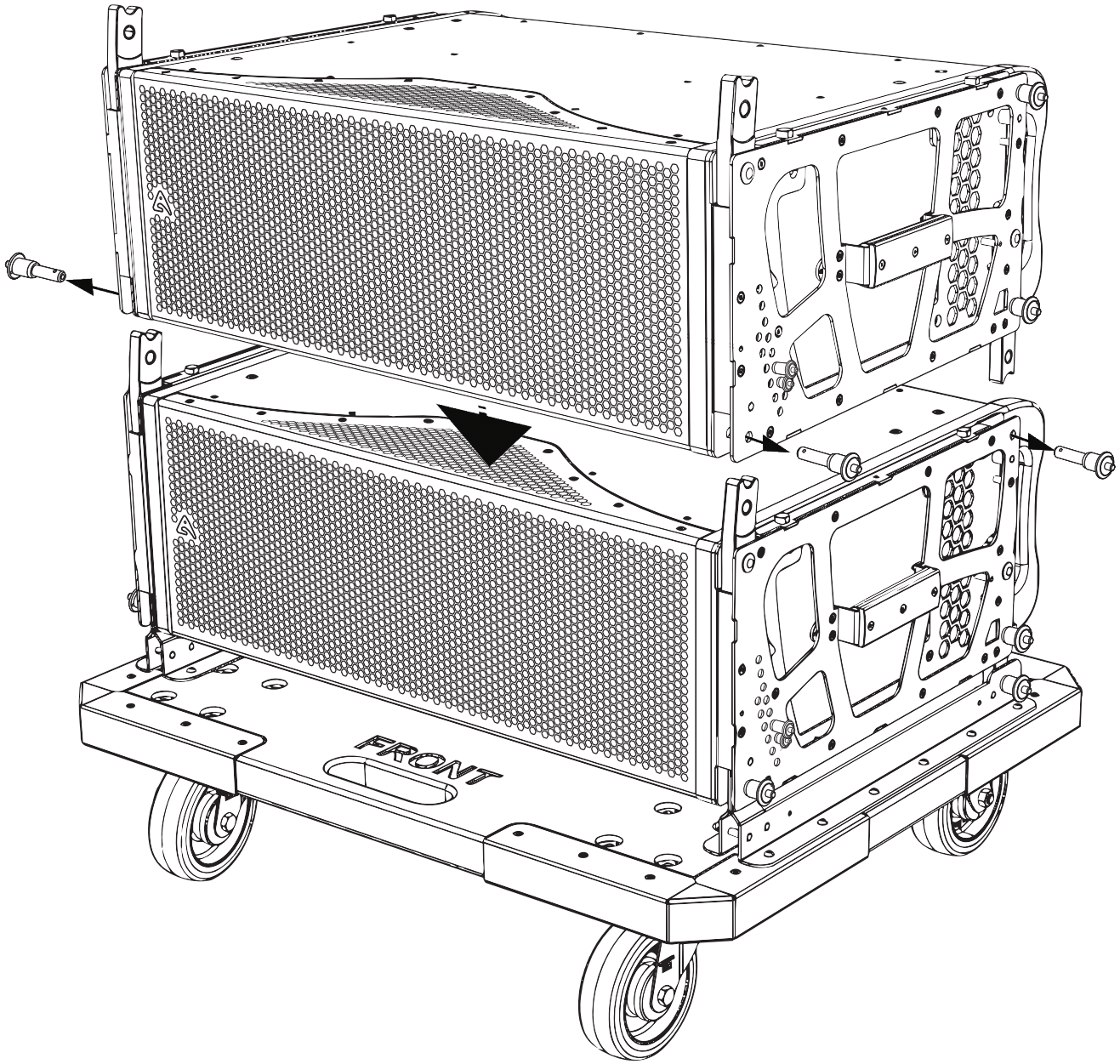

When all four corresponding sets of lugs are mated correctly re-insert each of the ball-lock pins to secure the connection between the two enclosures. Verify that each pin is securely locked and cannot be removed without pressing the release.
This entire procedure can be repeated until the maximum of four AX2022 units is secured atop the AXSKATE2022B.

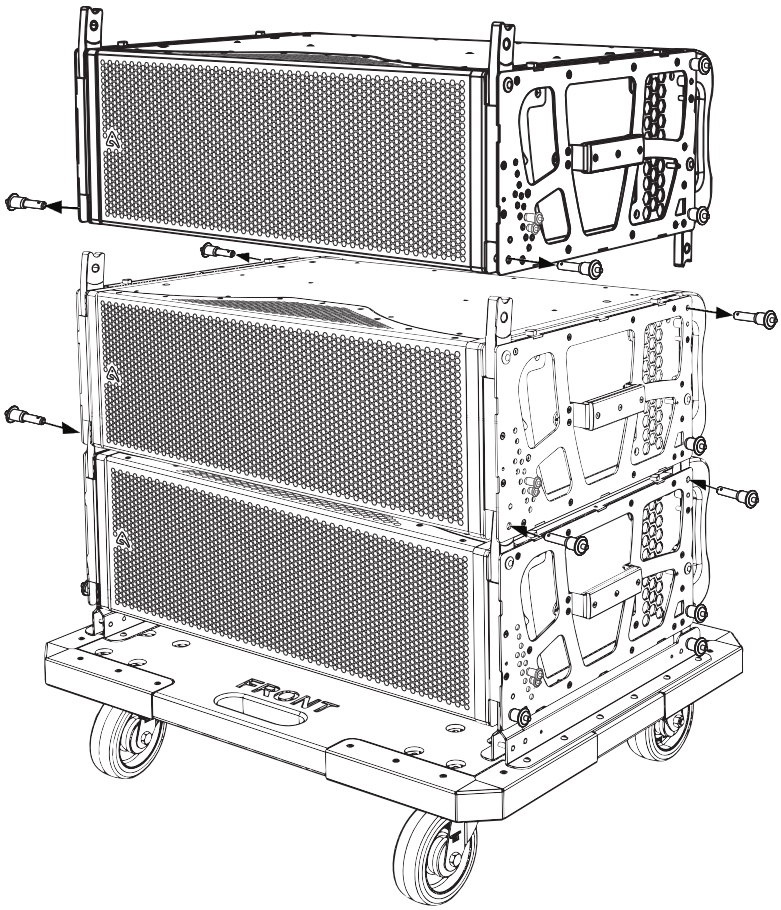

MAX:
AXSKATE2022B
+ 4 AX2022

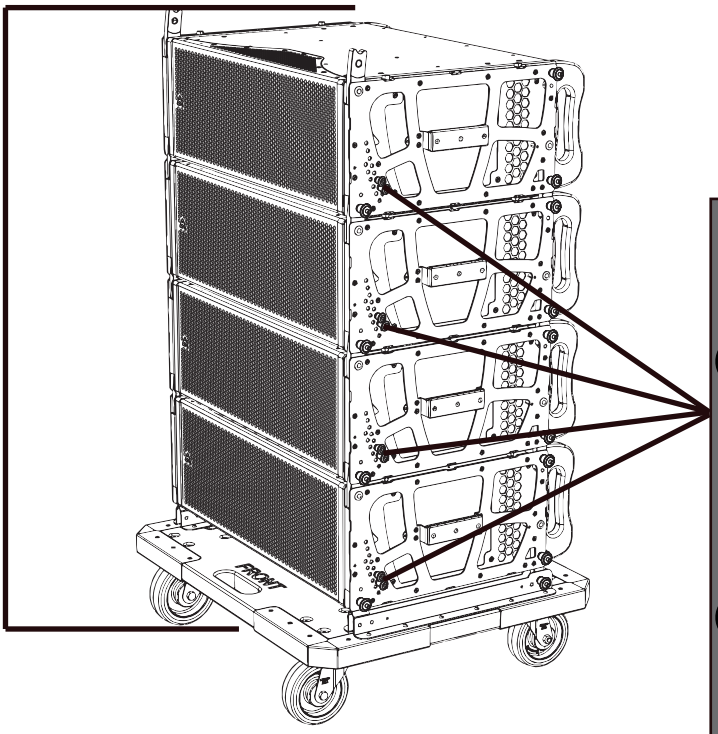

ALL AX2022 UNITS EACH SIDE

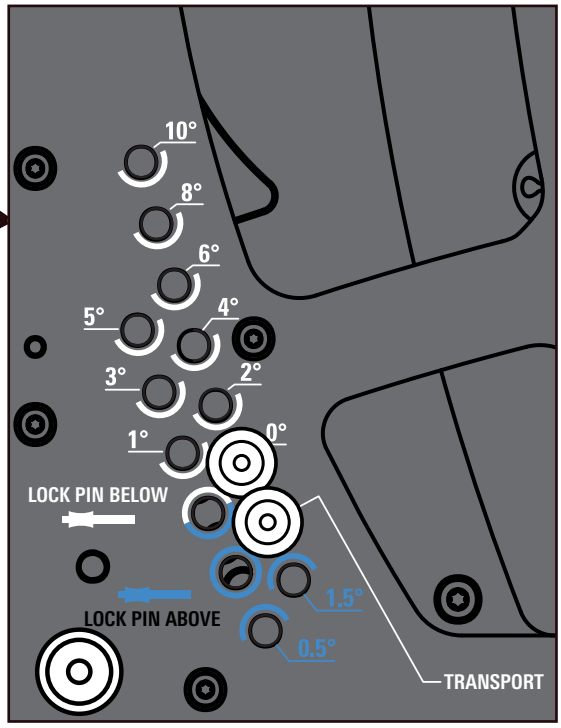

During transport and storage, the locking pins on each side of every AX2022 unit MUST be fully inserted and locked into the pinhole labelled **"TRANSPORT"**, as shown. The splay angle selection pin, however, can be inserted into a pre-selected, desired angle, see the procedure for pre-selection **(page 17)**.

AIMING AND SUSPENDING INSTRUCTIONS

AX2022P units can be suspended in homogeneous arrays or beneath vertical arrays of SW2421CFP subwoofers using the KPTAX2022 flying bar. The enclosures are linked together into a column using a series of couplers integrated in the frame of each enclosure. Each system can be configured properly both acoustically and mechanically using the aiming software.
The KPTAX2022 flying bar can also be used as a stable base for floor-stacked deployments of up to four AX2022 units.

Single Point rigging:
KPTAX2022 flying bar has a maximum capacity of 1650 kg (3640 lbs) with a 0° head angle. It can support up to:
- **16 AX2022P with flying bar inclined from +20° to -7°**
- **12 AX2022P with flying bar inclined from +20° to -10°**
- **3 SW2421CFP + 10 AX2022P with flying bar at 0° – use only suspension holes from #9 to #13**
- **10 SW2421CFP with flying bar at 0° – use only suspension hole #11**

Note: The use of multiple rigging points requires specific study for different configurations. Contact the manufacturer.

KPTAX2022 FLYING BAR AND ACCESSORIES

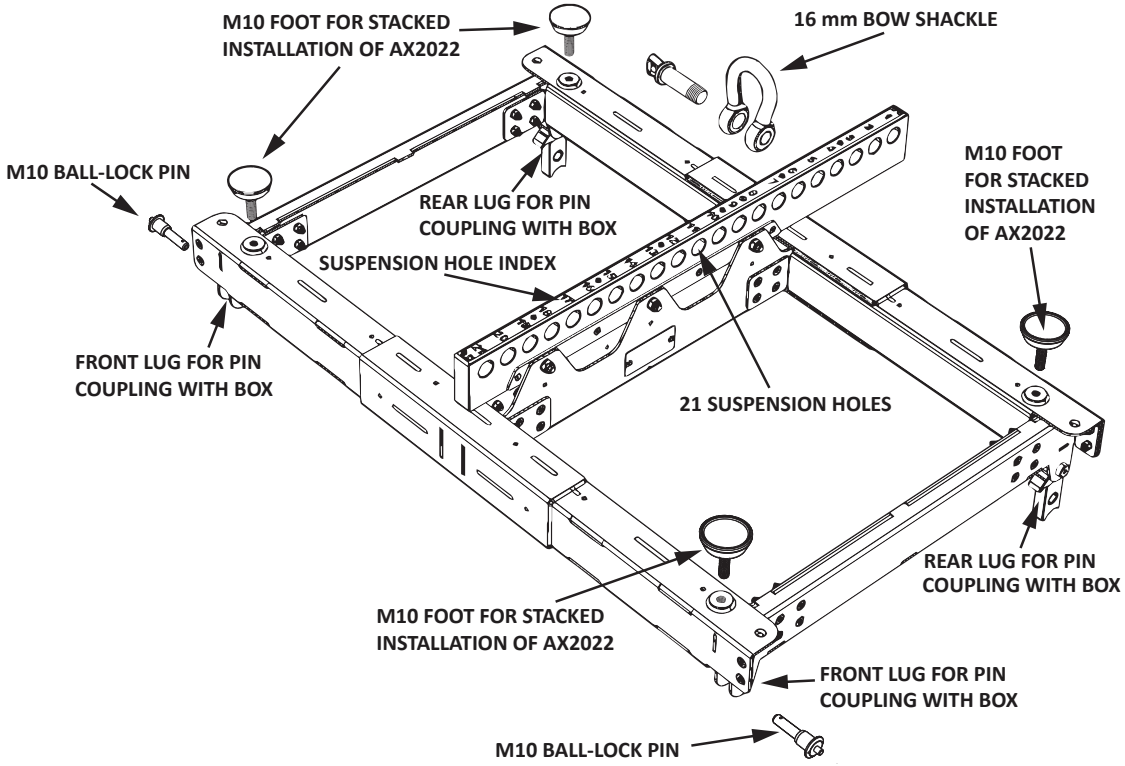

Wind loads
When planning an open-air event it is essential to obtain current weather and wind information. When loudspeaker arrays are flown in an open-air environment, possible wind effects must be taken into account. Wind load produces additional dynamic forces acting on the rigging components and the suspension, which may lead to a dangerous situation. If according to the forecast wind forces higher than 5 bft (29-38 km/h) are possible, the following actions have to be taken:
- The actual on-site wind speed has to be monitored permanently. Be aware that wind speed typically increases with height above ground.
- Suspension and securing points of the array should be designed to support double the static load in order to withstand any additional dynamic forces.

WARNING!
Flying loudspeakers overhead at wind forces higher than 6 bft (39-49 km/h) is not recommended.
If the wind force exceeds 7 bft (50-61 km/h) there is a risk of mechanical damage to the components which may lead to a dangerous situation for persons in the vicinity of the flown array.
- Stop the event and make sure that no person remains in the vicinity of the array.
- Lower and secure the array.

KPTAX2022 FLYING BAR REVERSAL

The KPTAX2022 flying bar can be reversed to provide greater flexibility in terms of aiming arrays of AX2022 or combined arrays of SW2421CFP and AX2022P/A. If the installation configuration requires the reversed flying bar, this can be carried out by using a 5 mm hex wrench and a 13 mm spanner to remove the three sets of M8 bolts and hardware **(1&2)**. The bar assembly then be lifted out and rotated 180° **(3)**. Once the bar is re-inserted, the hardware must be replaced and thoroughly torqued **(4)**.

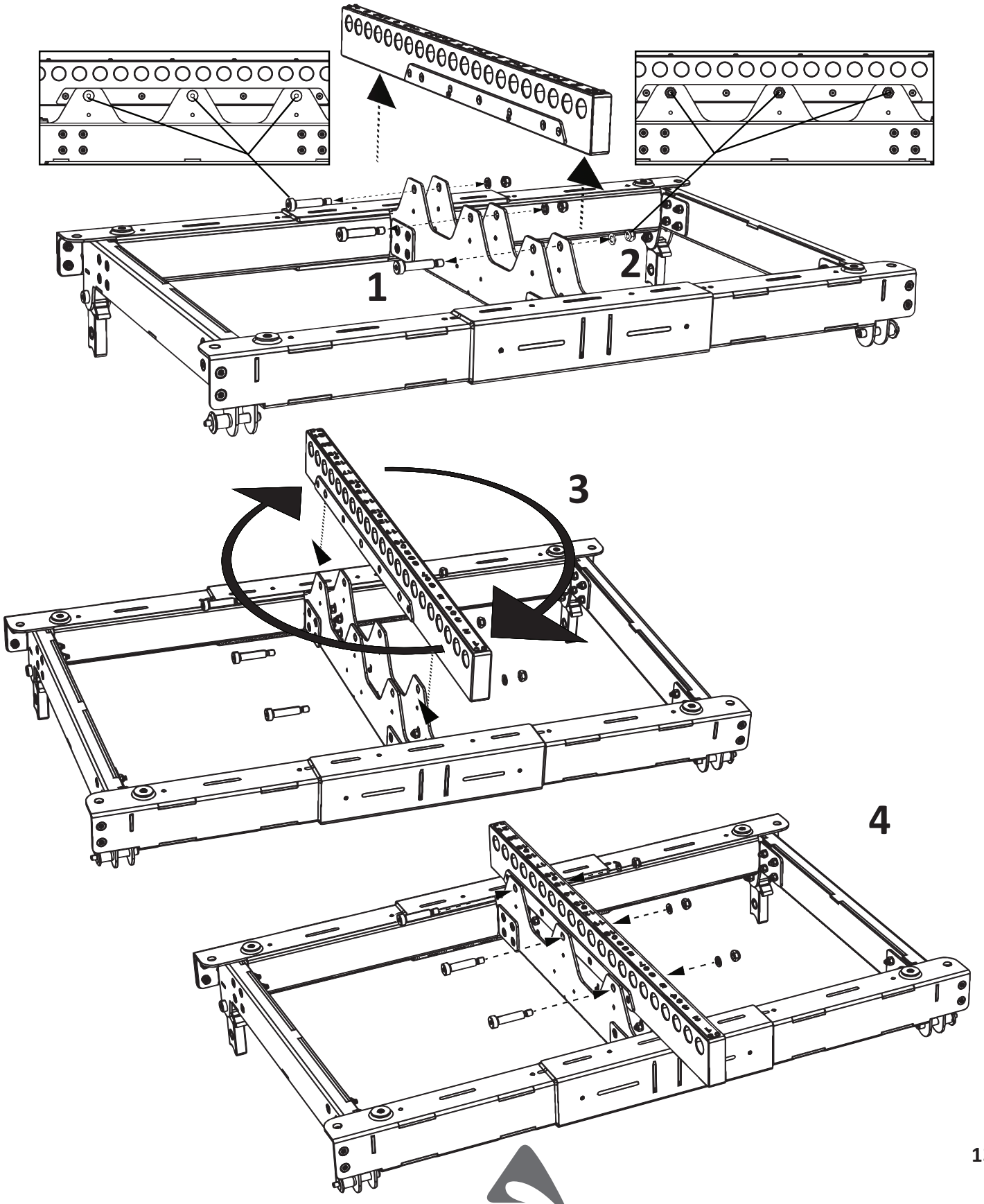

KPTAX2022 FLYING BAR ASSEMBLY SEQUENCE

Follow the sequence in the following figures for coupling the flying bar to the first enclosure. Ensure that all locking pins are inserted properly and locked.
Begin by removing the locking pins from the forward lugs of the KPTAX2022 Flying Bar **(1)** and the locking pins from the rear lugs on the top of the AX2022 **(2)**. Lower the KPTAX2022 onto the enclosure, aligning it so that the forward and rear lugs mate with those of the AX2022 **(3)**.
Finally, unscrew and remove the pin from the shackle **(4)**.

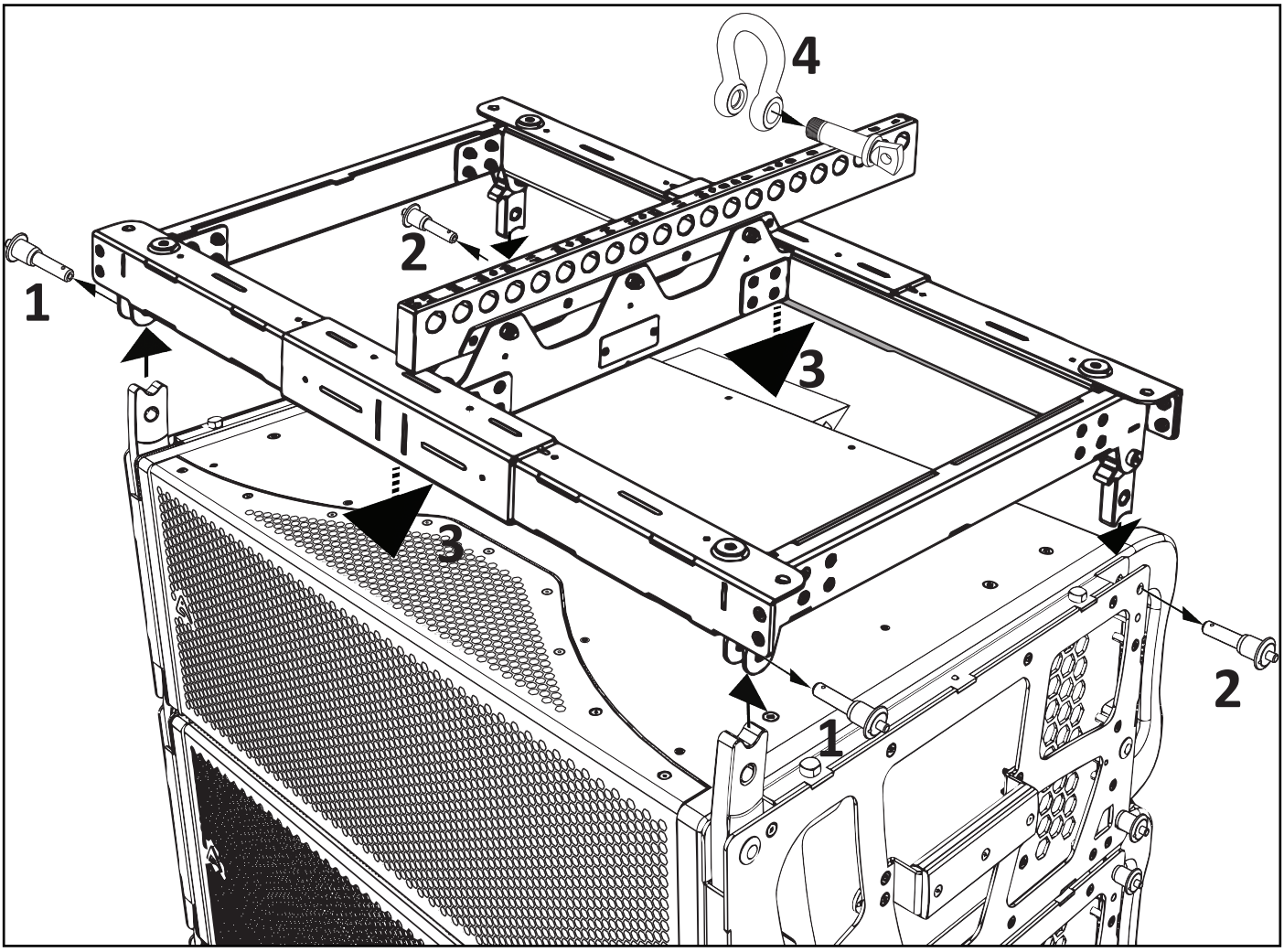

KPTAX2022 FLYING BAR ASSEMBLY SEQUENCE (continued)

Next, reinsert the locking pins into the holes from which they were removed so that they pass through the mated lugs of the speaker enclosure and the flying bar at the front **(5)** and rear **(6)**. This secures the flying bar to the AX2022.
Following the suspension hole index atop the flying bar, align the shackle with the suspension hole required **(7)**, as indicated by the software for the specific application. Insert and firmly tighten the shackle pin **(8)**, assuring that it is properly threaded and does not bind.

ATTENTION!
When installing any flown system, it is essential to adhere to all safety protocols and best rigging practices, including securely mousing shackles, using redundant safety anchor points, and implementing all other safety measures mandated by local or national regulations or codes.

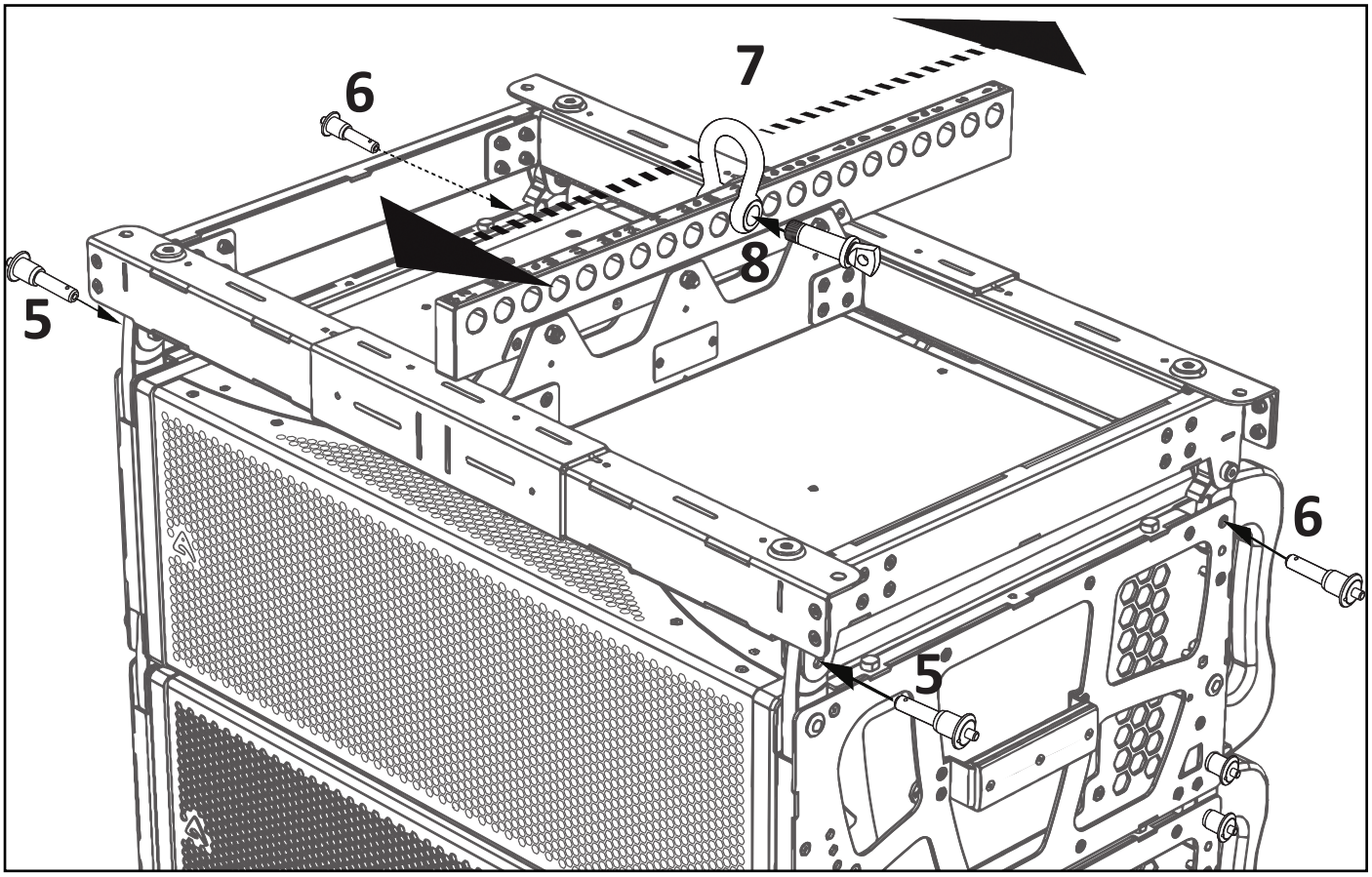

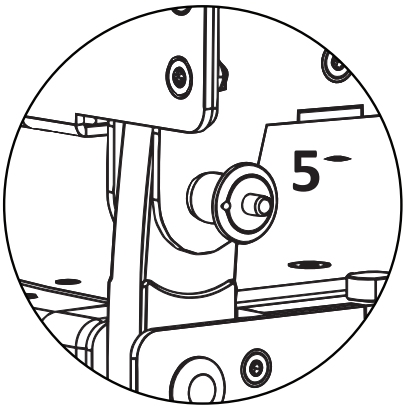

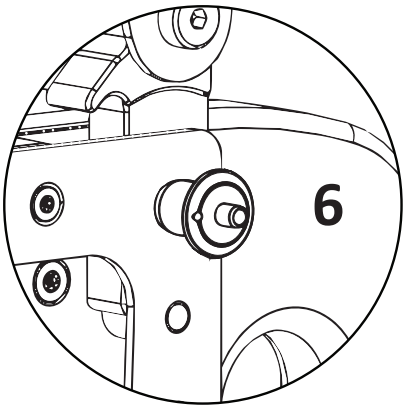

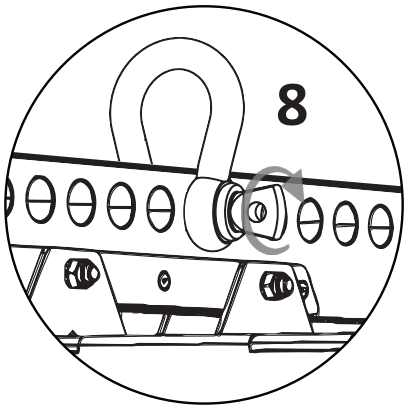

SETTING SPLAY ANGLES BETWEEN AX2022 UNITS BEFORE HOISTING

The integrated hardware of the AX2022 allows the selection and preconfiguration of splay angles using two 8 mm locking pins on each side of the unit. As noted previously, during (assembled) storage and transport, these pins must remain in the "TRANSPORT" configuration **(page 11)**. Before flying arrays of AX2022, pre-coupled units should be configured for the splay angles required by the application and predetermined using the prediction software.

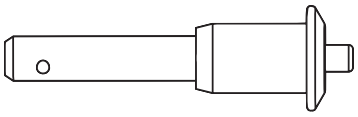

TYPE A – for locking splay angle

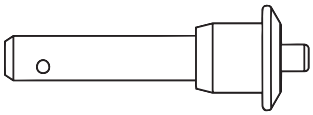

TYPE B – for selecting splay angle

The two locking pins on each side are of different types, with different lengths of release knob. This is important because they will always be inserted into two adjacent holes and it allows one to be inserted over the other. The shorter, "Type B" pin will always be used to select the splay angle, while the longer, "Type A" pin will be inserted to lock the angle once the enclosure has been raised and inclined.

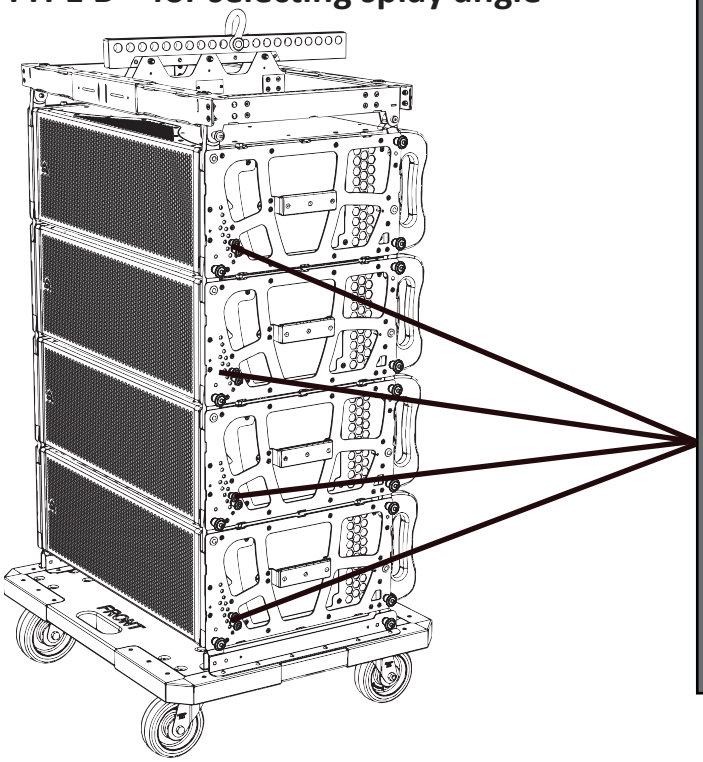

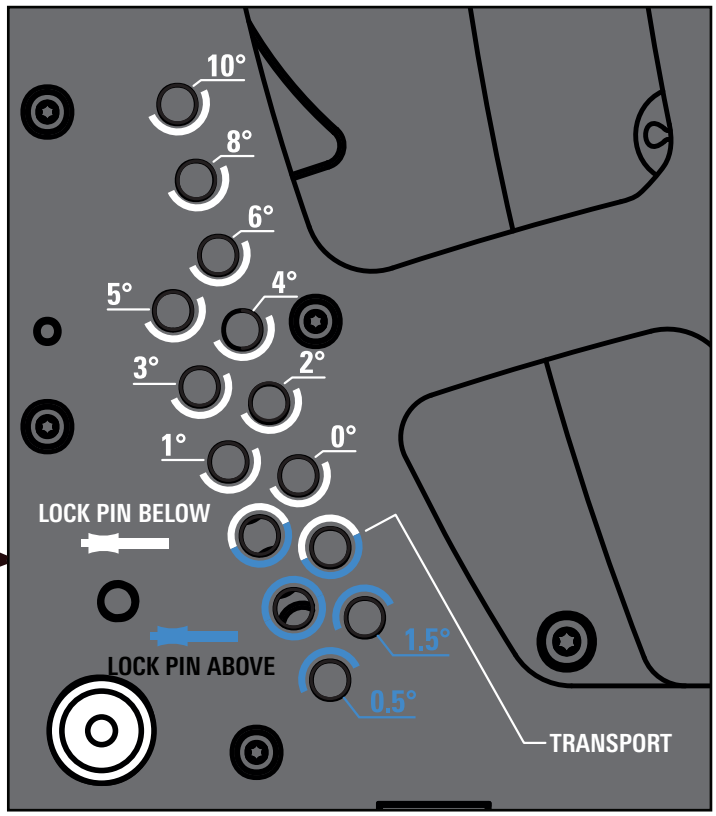

Some splay angle configurations will require the locking pin (Type A) to be inserted into the hole below that of the Type B pin that selects the angle, while some will require that the locking pin be inserted into the hole below it.
The angle selection and locking holes are arranged in two rows. When an angle-selecting hole labelled in white on the chassis is fitted with the Type B pin, the Type A locking pin will subsequently be inserted into the hole below it in the same row. Likewise, When an angle-selecting hole labelled in blue on the chassis is fitted with the Type B pin, the Type A locking pin will subsequently be inserted into the hole above it in the same row.

Splay Angle	Type B Hole (angle selection)	Type A Hole (locking)
0°	0°	"TRANSPORT"
0.5°	0.5°	unlabelled blue
1°	1°	unlabelled blue/white
1.5°	1.5°	"TRANSPORT"
2°	2°	0°
3°	3°	1°
4°	4°	2°
5°	5°	3°
6°	6°	4°
8°	8°	6°
10°	10°	8°

SETTING SPLAY ANGLES BETWEEN AX2022 UNITS BEFORE HOISTING (continued)

The following is an example of splay angle selection prior to and during hoisting. It is important to note that there will be a slight difference in the procedure, depending on whether the AX2022 units are being prepared on the AX2022SKATEB prior to being moved into position for hoisting or when the top enclosure of the units on the skate is already attached and supported from above by the KPTAX2022 flying bar or flown AX2022 or SW2421CFP units.

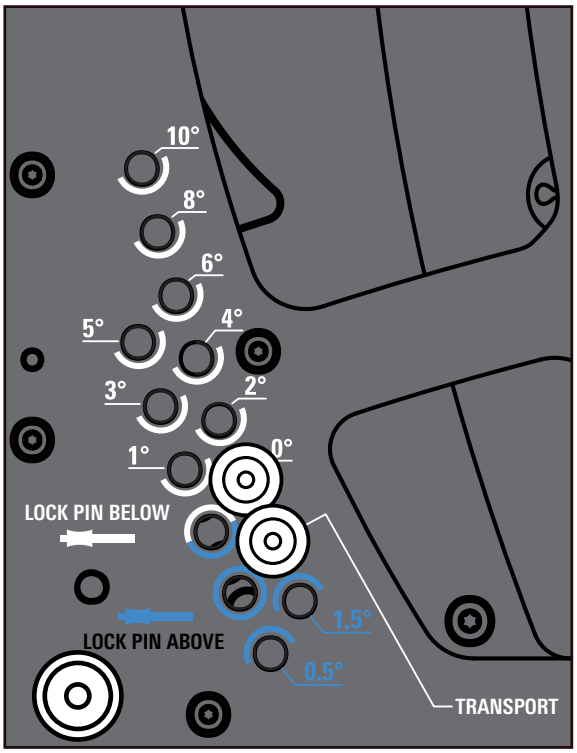

1. ON THE SKATE
The system will initially have the selection pin inserted into the hole corresponding to the 0° angle, while the longer pin will be in the "TRANSPORT" hole below, serving to lock the angle selected by the first pin.

IMPORTANT!
At this point, if the unit on the skate is ready for hoisting and already supported from a rigging point either directly via an attached KPTAX2022 or indirectly via coupling to hoisted AX2022 or SW2421CFP units, the locking pin on each side can remain out and ready for lifting. If, instead, the angles have been selected in advance but the units on the skate must still be rolled into position for lifting, the LOCKING PIN ON EACH SIDE MUST BE RETURNED AND LOCKED IN THE "TRANSPORT" HOLE.

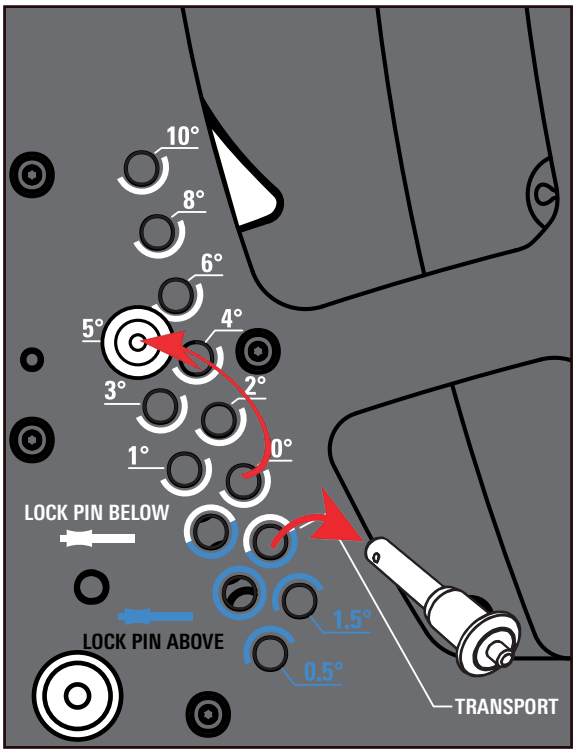

2. ANGLE PRESELECTION
Remove the locking pin from the hole labeled "TRANSPORT". Then, remove the selection pin from the "0°" hole and insert it into the hole indicating the new desired angle – in this case, 5°.

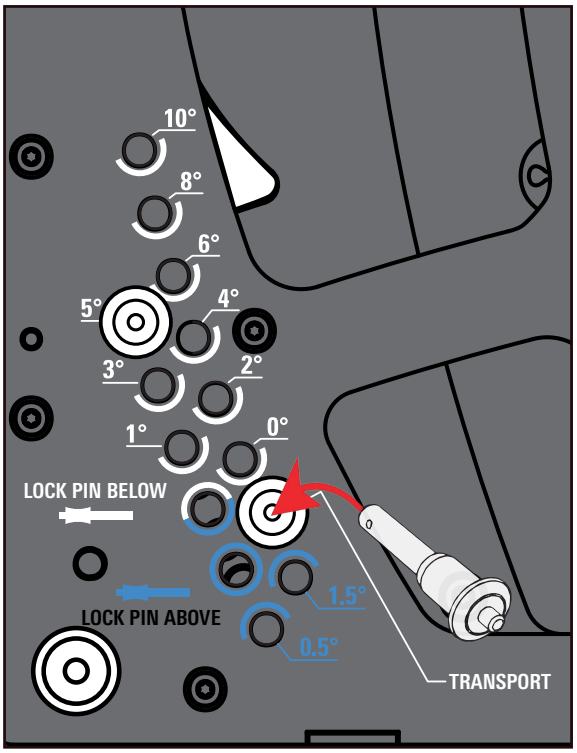

SETTING SPLAY ANGLES BETWEEN AX2022 UNITS BEFORE HOISTING (continued)

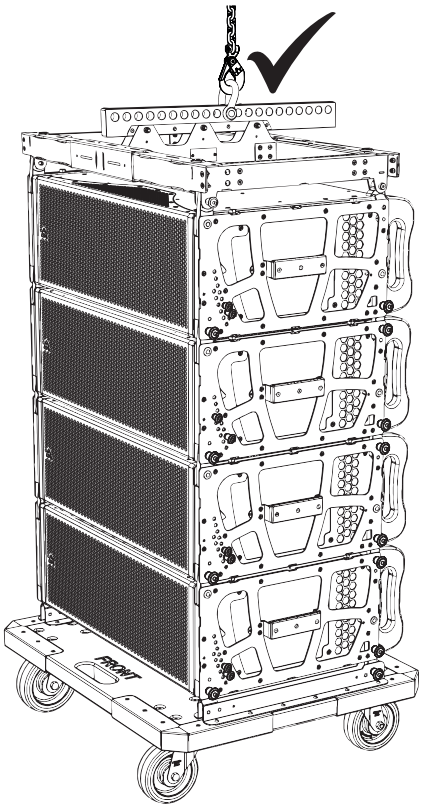

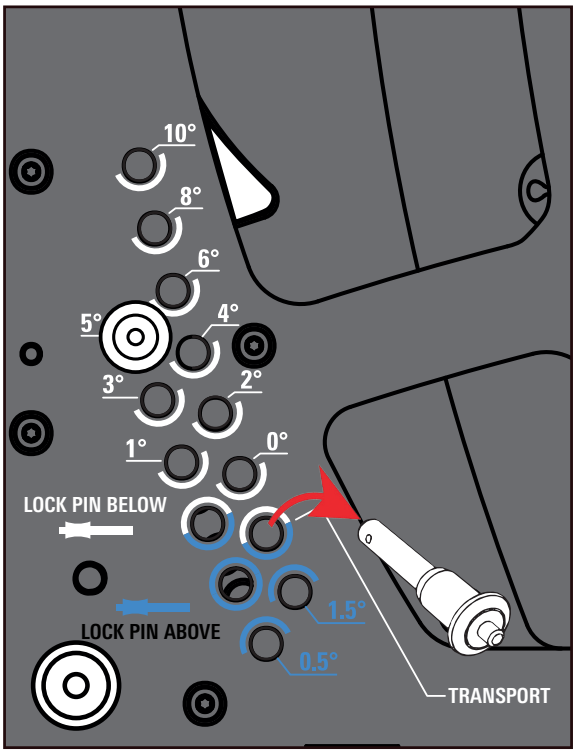

3. PRE-LIFTING

When the units are securely attached to a rigging point and ready for hoisting, remove the locking pins. This will allow the array to open freely to the selected angle.

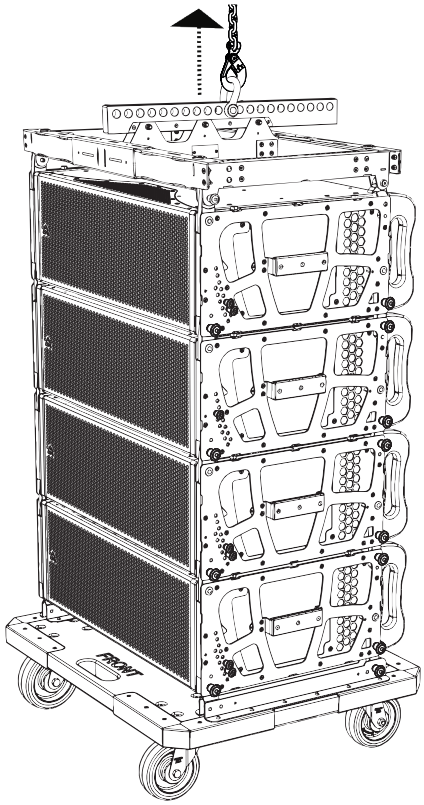

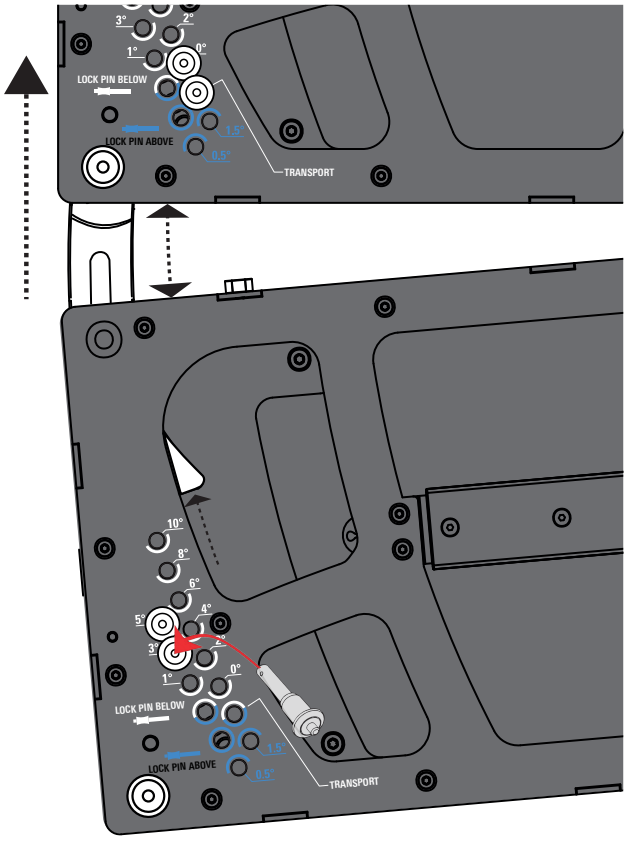

4. HOISTING AND LOCKING

As the array is hoisted, the splay will begin to open until the selected angle is reached for each individual unit. Once the selected angle has been reached, insert the locking pin into the hole below the pin used for pre-selection (in this case of a 5° splay angle, the locking pin will be inserted into the hole labelled 3°).

KPTAX2022 - AX2022 FLOWN ARRAY ASSEMBLY

The following is an example of the hoisting and assembly procedure for an array of AX2022 units connected directly to the KPTAX2022 flying bar, starting from the pre-lifting stage of the splay angle configuration (page 18). The top four units of the array are rolled into place on the AXSKATE2022B, with the KPTAX2022 coupled to the top unit, and this assembly is hooked to the hoisting system via the shackle. The first four units in the example(**A, B, C** and **D**) are configured, from top to bottom, at 0°, 1.5°, 2° and 3°.

Once the system is secured to the rigging point, the Type A locking pins of the splay angle system on units **B, C** and **D** can be removed from the "TRANSPORT" holes, while unit **A** is already correctly set and locked at 0°. Remove also the 10 mm locking pins at the front and rear of each side to uncouple the AXSKATE2022B from the bottom unit.

At this point the array can be slowly hoisted. As the array is lifted, the splay will begin to open until the selected angle is reached for each individual unit. Once the selected angles have been reached, insert the locking pins into the correct adjacent holes for each selected splay angle (page 16). Note that, in this example, units A, C and D will have the locking pin inserted in the hole below that of the selection pin, while unit B (1.5°) will use the hole above the selection pin.

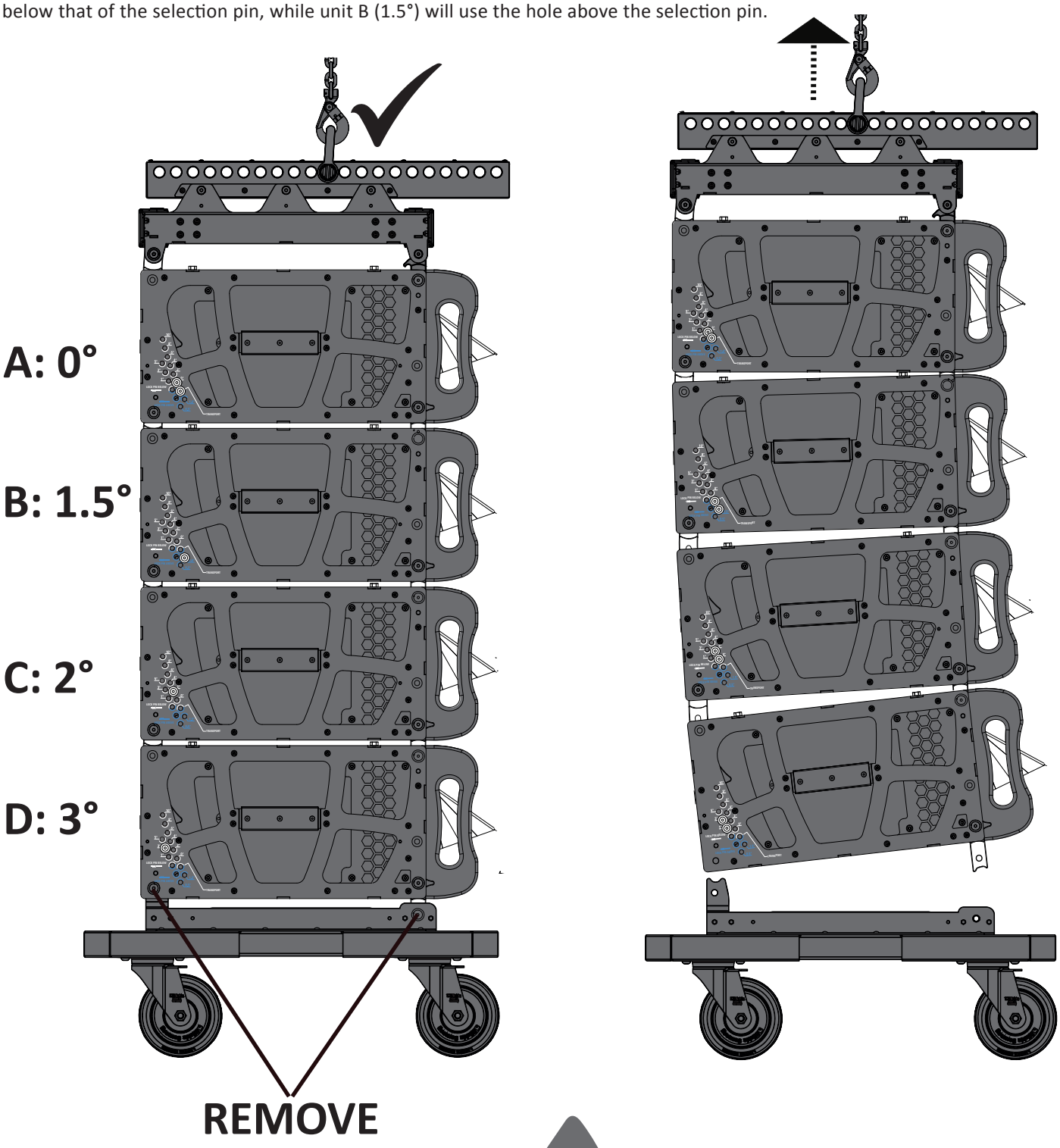

KPTAX2022 - AX2022 FLOWN ARRAY ASSEMBLY (continued)

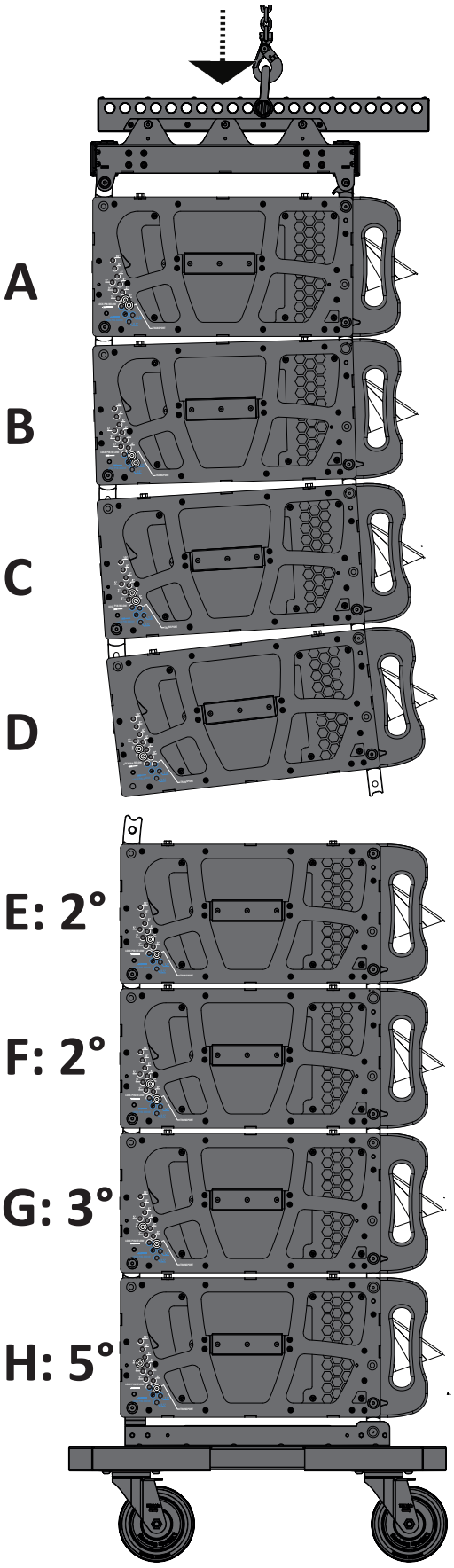

After the first units are hoisted, the skate can be removed and the next four units can be rolled into place underneath the top units.
Until the top AX2022 of the second assembly (unit E) is securely coupled to the bottom AX2022 (unit D) of the previously hoisted assembly, the four units still on the skate must have the locking pins inserted into the “TRANSPORT” holes on each side, and the 10 mm locking pins must remain inserted to lock unit H to the AXSKATE2022B.

To couple the bottom AX2022 in the lifted array segment to the top AX2022 of the successive pre-assembled segment, the procedure is identical to coupling enclosures for transport.
First, if they are inserted, remove the locking pins from the bottom front lugs of the upper speaker **(1)**, and locking pins from the top rear lugs of the lower speaker **(2)**.

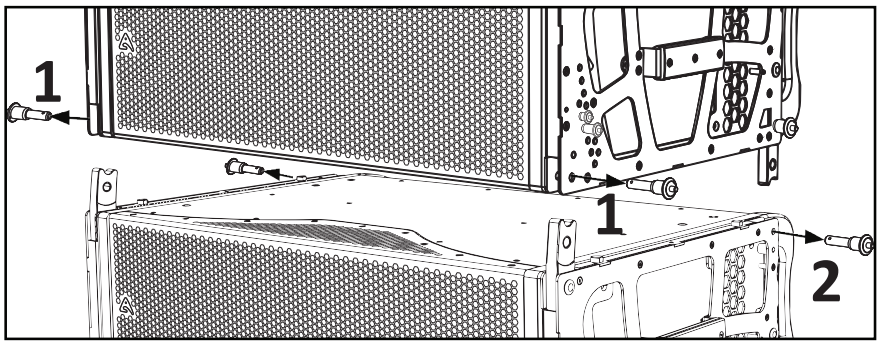

Carefully lower the flown array segment, aligning it with the lower segment until all four corresponding sets of lugs are mated correctly. Then re-insert each of the locking pins to secure the connection between the two enclosures **(3)**. Verify that each pin is securely locked and cannot be removed without pressing the release.

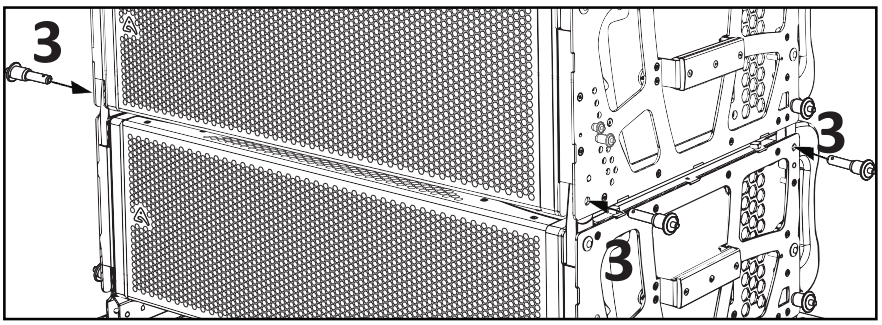

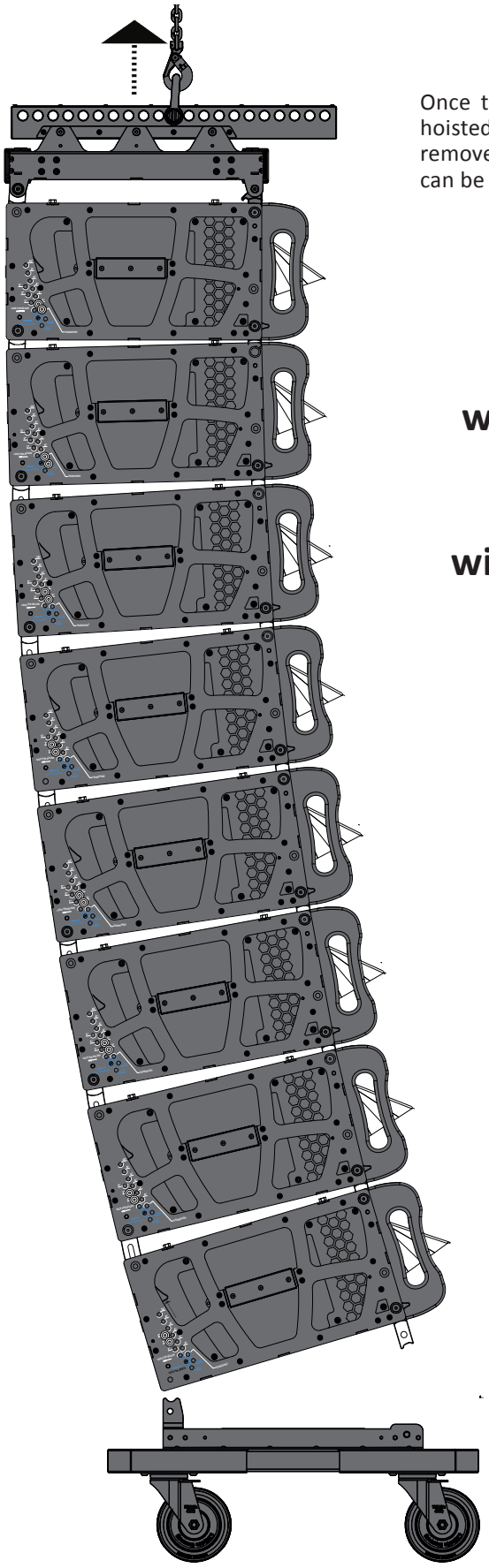

Once the two array segments are securely coupled, the array can be again hoisted, the splay angles can be locked on the lower enclosures and the skate removed, following the same procedure as on page 19. The entire procedure can be repeated until the maximum of 16 AX2022 units is flown.

MAX:
KPTAX2022 + 16 AX2022P
with flying bar inclined from +20° to -7°

KPTAX2022 + 12 AX2022P
with flying bar inclined from +20° to -10°

KPTAX2022 - SW2421CFP - AX2022P ASSEMBLY SEQUENCE

ATTENTION!
Suspending arrays of SW2421CFP units must be carried out according to specific procedures and in a specific sequence outlined in the dedicated product manual of those units. This section of this manual covers only the procedure for connecting the SW2421CFP units to the AX2022 units.

Coupling AX2022 units in combined arrays with SW2421CFP units follows a similar procedure to assembling arrays of AX2022. First, hoist the SW2421CFP unit(s) to a height that allows the upper section of a pre-assembled array of AX2022 units to be positioned directly under the hanging sub(s).
If they are still in place, remove the locking pins from the forward bottom lugs of the bottom SW2421CFP unit **(1)**.
Next, again if they not already deployed, remove the pins to lower the rear extendable coupling lugs of the bottom SW2421CFP, and lock them in the deployed position by replacing the pins **(2)**.

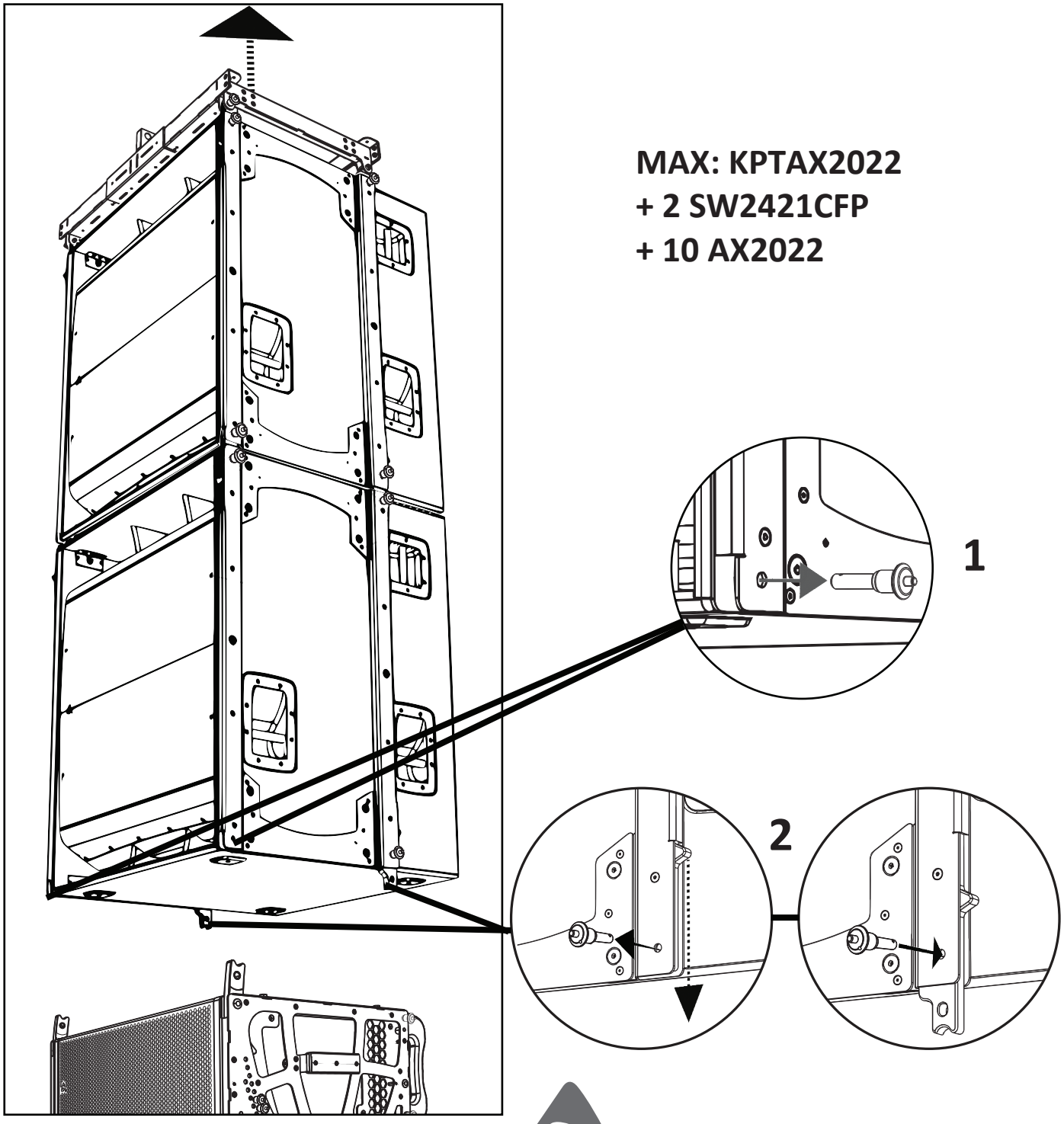

KPTAX2022 - SW2421CFP - AX2022P ASSEMBLY SEQUENCE (continued)

Once the bottom SW2421CFP unit is prepared, remove the locking pin from the rear lugs of the top AX2022 unit **(3)** to allow the bottom extendable lugs of the SW2421CFP unit to mate with them. Before lowering the subwoofer(s) to attach the AX2022 units, verify that the rear lugs of each of the lower AX2022 units is properly coupled to the successive unit **(4)**. Verify also that the forward sets of coupling lugs are properly mated and locked **(5)** and that the splay angle selection pins of each AX2022 unit are in the appropriate pin hole on each side **(6)**. Until the top AX2022 unit is securely coupled to the bottom SW2121CFP unit, the locking pins should remain in the "TRANSPORT" position **(7)**.

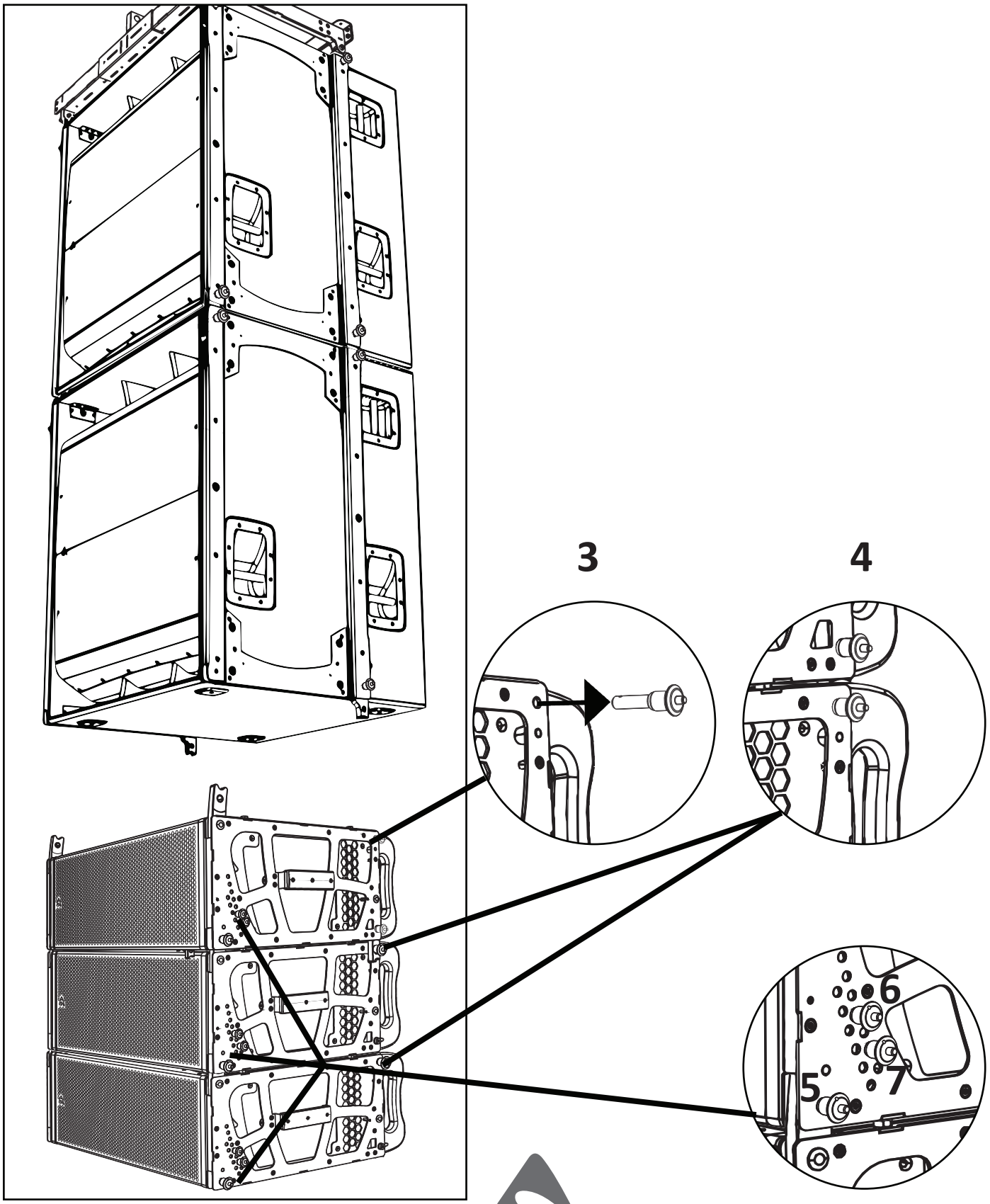

KPTAX2022 - SW2421CFP - AX2022P ASSEMBLY SEQUENCE (continued)

Lower the SW2421CFP unit(s) onto the AX2022 array, aligning it so that the forward and rear lugs of the subwoofer mate reciprocally with those of the top AX2022 unit **(7)**.

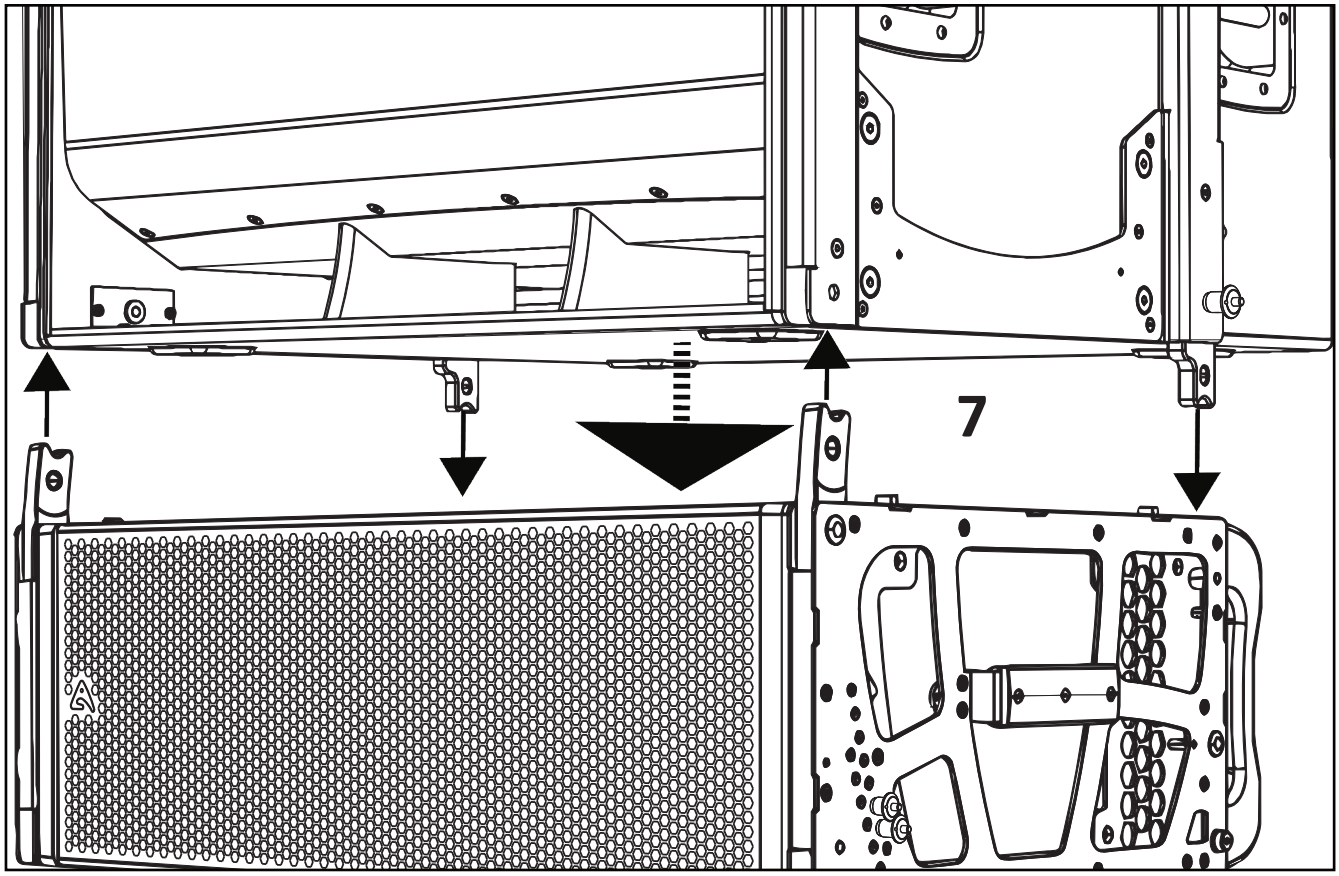

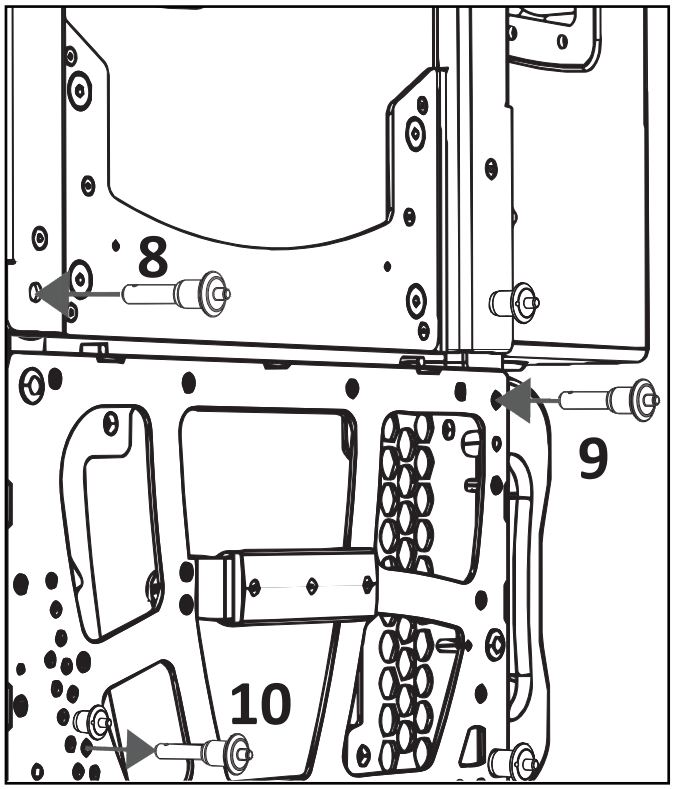

When the four pairs of lugs are properly mated, with the extendable lugs engaged inside the open lugs, secure the two cabinets together by re-inserting the pins in both forward lugs at each side of the bottom of the SW2421CFP **(8)** and in both upper rear lugs of the top AX2022 **(9)**.

The two units are now secured together and ready for the process of hoisting and blocking the splay angles of the AX2022 units. At this point, remove the 8 mm locking pins from the "TRANSPORT" position to allow the array to open freely to the selected angles.

The hoisting process is now identical to that of flying arrays of AX2022 (page 19).

KPTAX2022 - AX2022P GROUND-STACKED DEPLOYMENT

The KPTAX2022 flying bar can be inverted for use as a base for ground-stacked deployment of up to 4 AX2022 units. To prepare the flying bar for use in ground deployment, first the load bar must be removed. This can be carried out by using a 5 mm hex wrench and a 13 mm spanner to remove the three sets of M8 bolts and hardware **(1&2)**. The bar assembly then be lifted out **(3**). Take care to reassemble the removed bolts and hardware with the load bar, in order not to lose them.

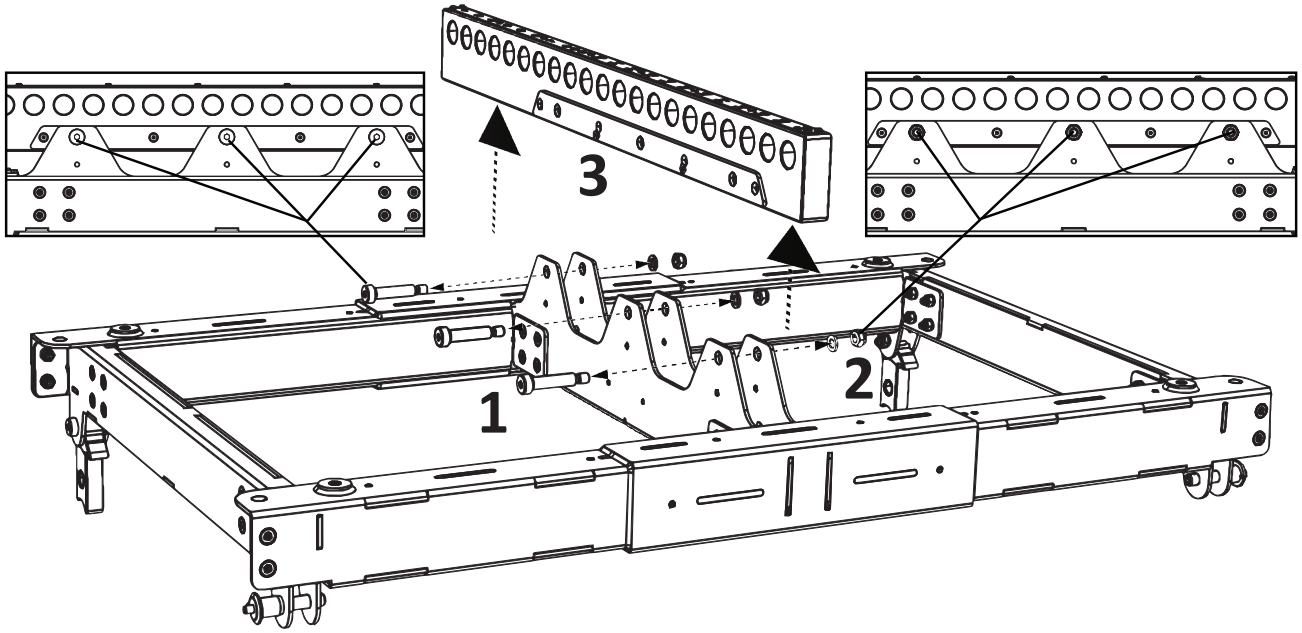

Next, the four M10 feet must be attached to the flying bar **(4)**. These screw into the four threaded holes on the top side of the flying bar, the same side from which the load bar has been removed. Turn the KPTAX2022 over and place it on the floor for deployment **(5)**.

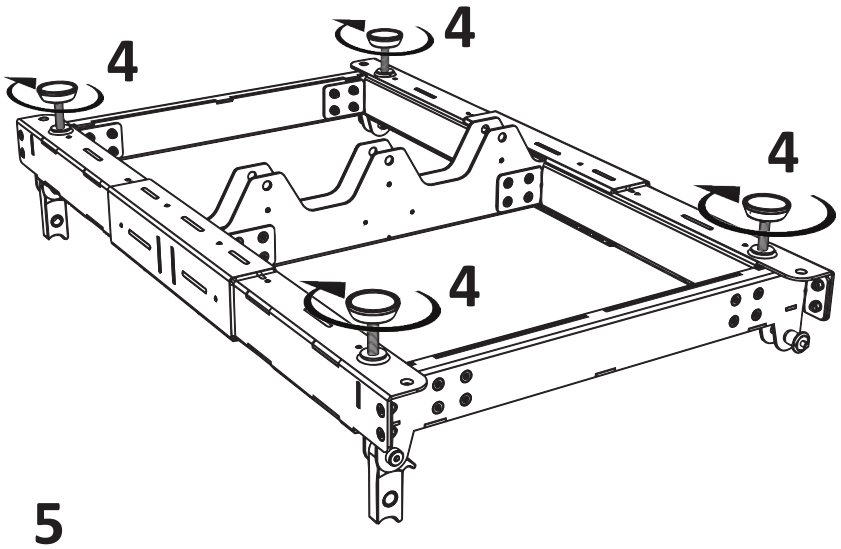

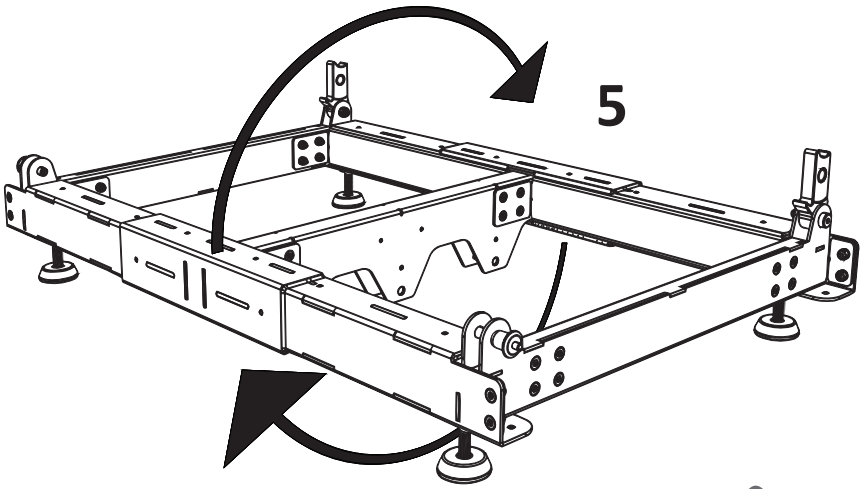

KPTAX2022 - AX2022P GROUND-STACKED DEPLOYMENT (continued)

KPTAX2022 must be placed on a solid surface capable of supporting the weight of the entire system without flexing or giving way. Before adding any AX2022 enclosures, verify that the flying bar is properly leveled front to back and side to side. If it requires adjusting, the screw-in feet can be adjusted individually to level the bar. Each of the feet must be extended sufficiently to raise the central beam and all other parts of the KPTAX2022B off of the surface.

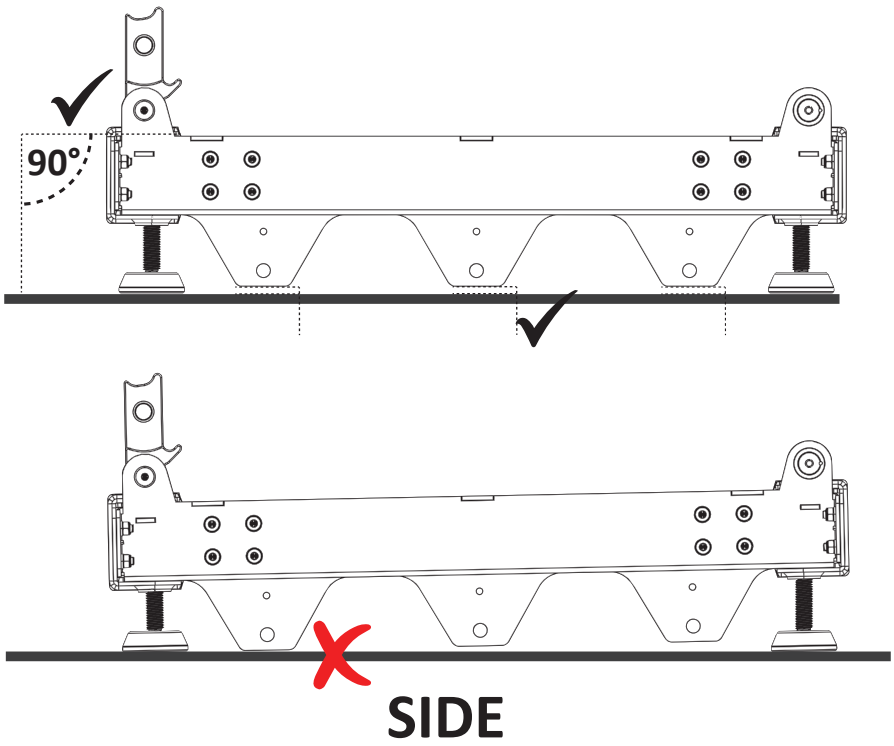

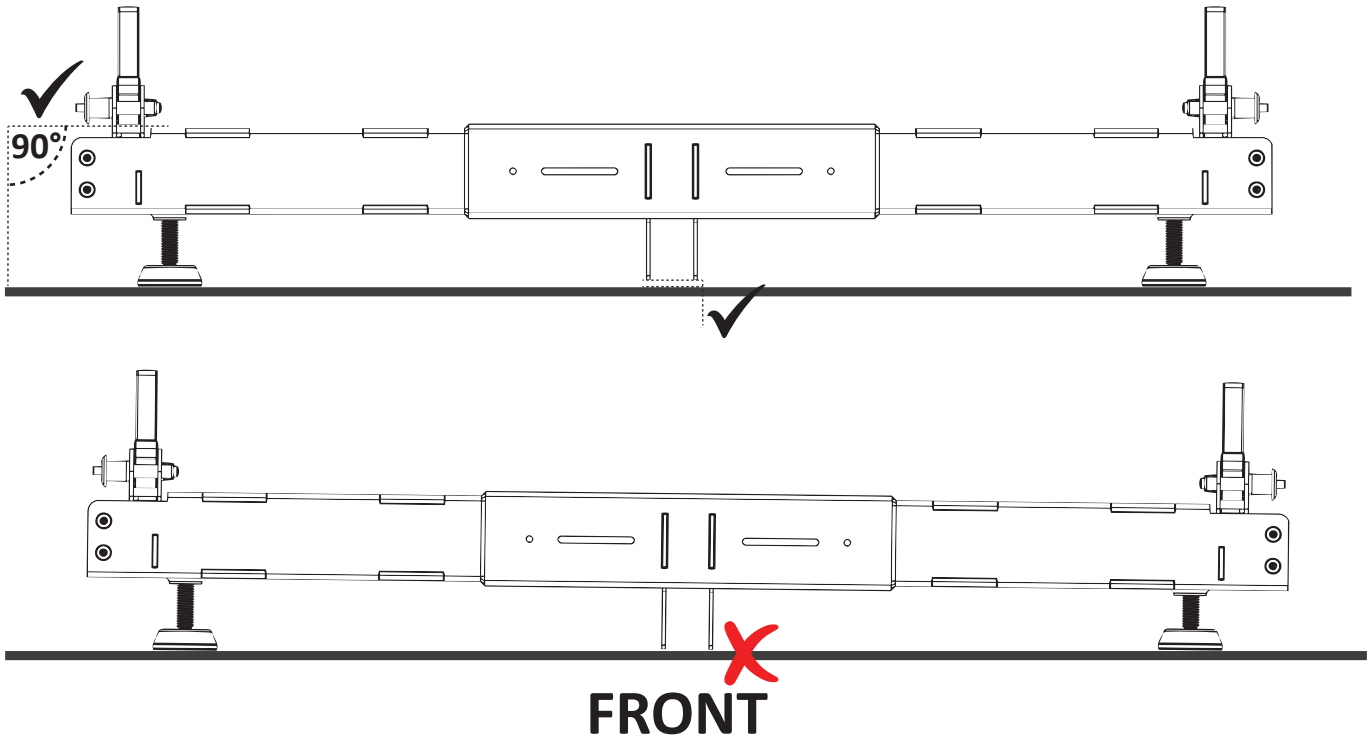

KPTAX2022 - AX2022P GROUND-STACKED DEPLOYMENT (continued)

When the KPTAX2022 is positioned and level, prepare the first AX2022 unit.

If the rear extendable coupling lugs on each side of the bottom AX2022 are in the retracted position, remove the pins that retain these and extend the lugs completely **(6)**. Next, lock the lugs in the deployed position by replacing the pins **(7)**.

Select the required splay angle for the enclosure. Splay angles must be selected and locked individually for each AX2022. On each side of the enclosure, remove both of the 8 mm pins **(8)**. Next, insert the shorter Type B pin into the hole that selects the angle desired **(9)** – 3° in the figure below – and use the handle of the lug on the side of the enclosure **(10)** to manually lift the lug until it stops at the correct angle and **(11)** insert the longer, Type A locking pin into the correct adjacent hole (refer to the table on page 16).

Verify that the lug is solidly locked into place and that each pin is locked and cannot be removed without pressing the release.

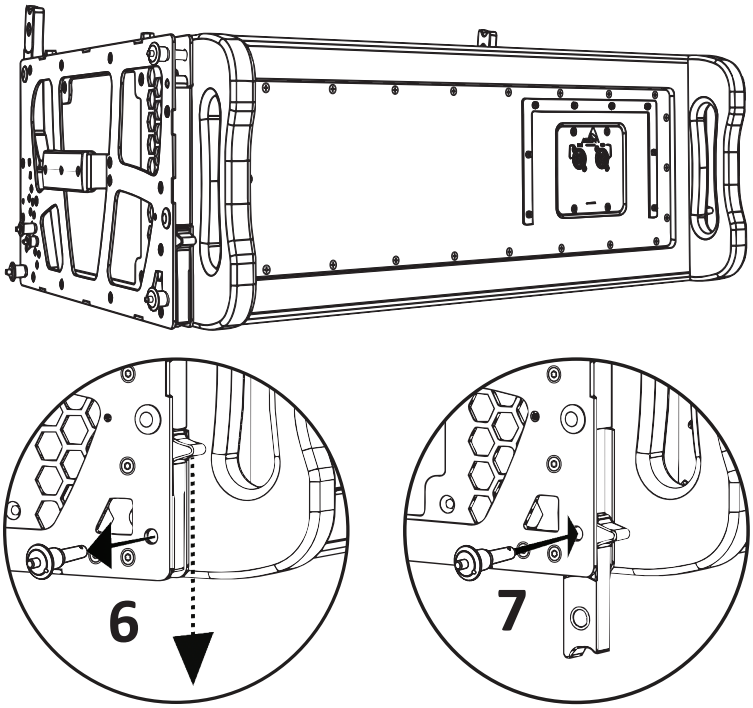

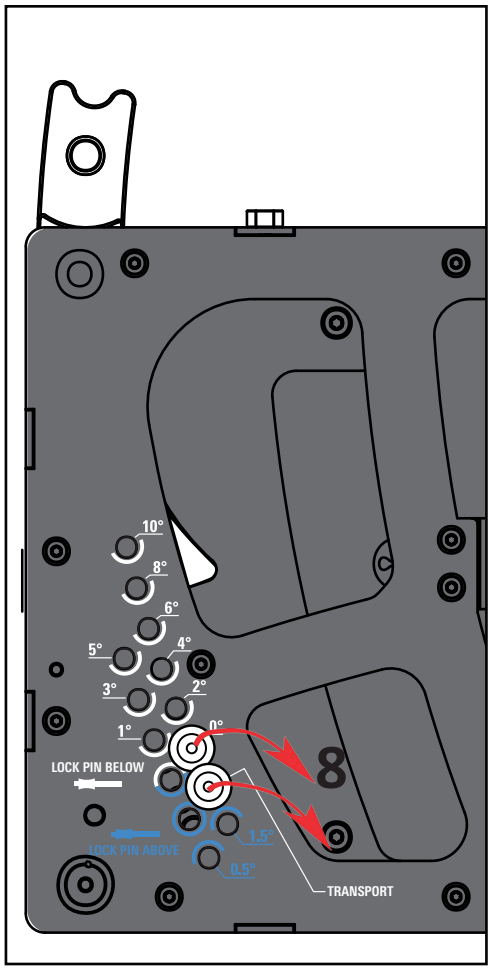

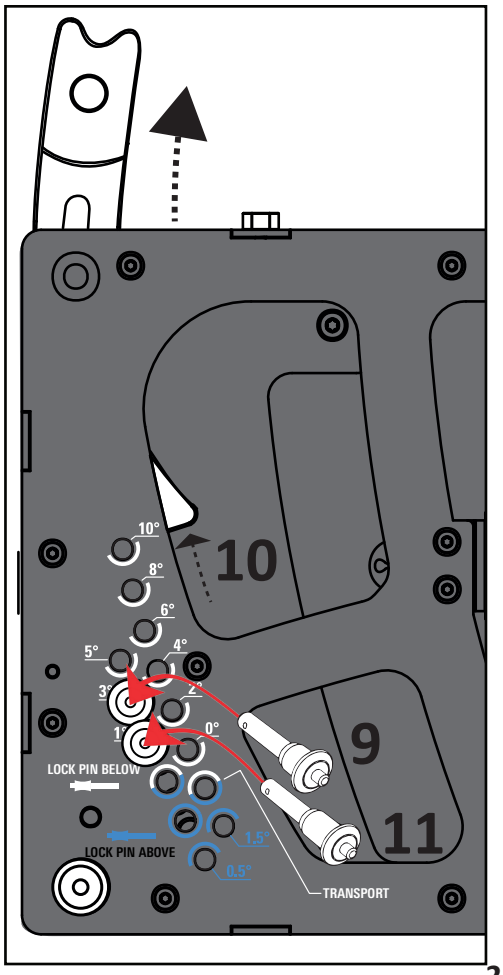

KPTAX2022 - AX2022P GROUND-STACKED DEPLOYMENT (continued)

Invert the AX2022 enclosure **(12)**.
Remove the locking pins from the forward lugs of the KPTAX2022 Flying Bar **(13)** and the locking pins from the rear lugs on the top of the AX2022 **(14)**. Lower the enclosure onto the KPTAX2022, aligning it so that the forward and rear lugs mate with those of the flying bar **(15)**.
Next, reinsert the locking pins into the holes from which they were removed so that they pass through the mated lugs of the speaker enclosure and the flying bar at the front **(16)** and rear **(17)**. This secures the flying bar to the AX2022.

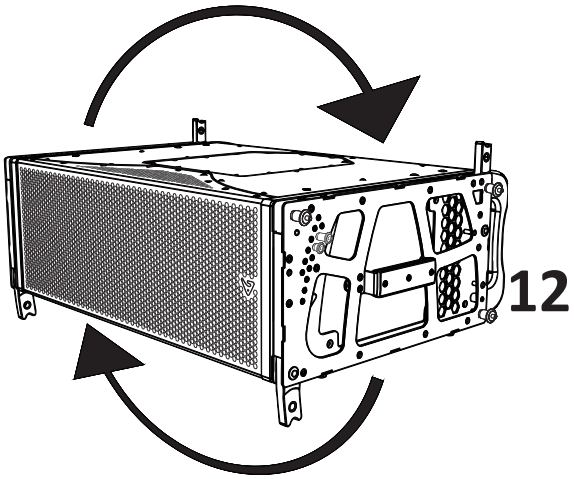

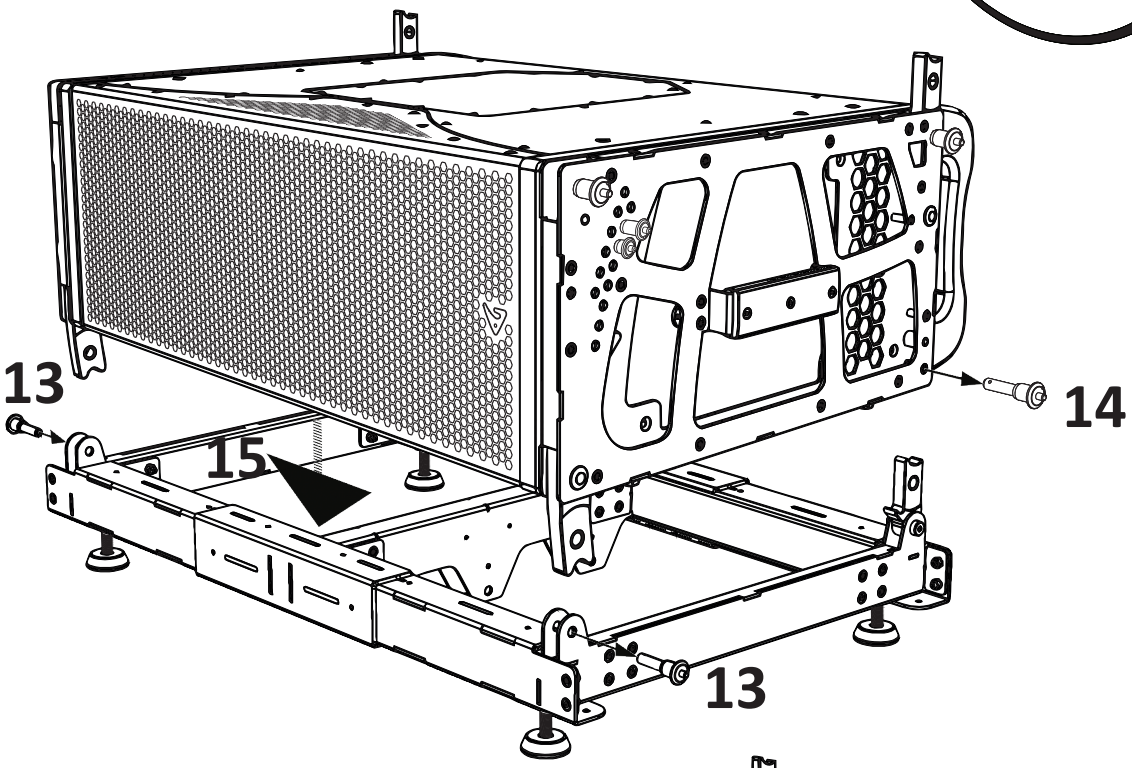

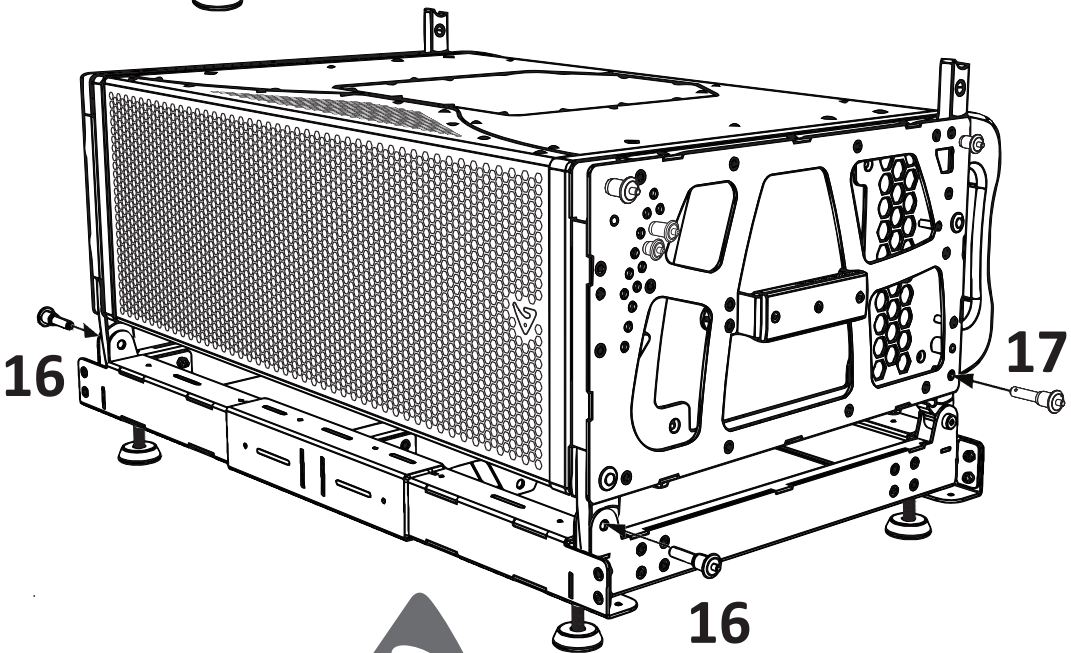

KPTAX2022 - AX2022P GROUND-STACKED DEPLOYMENT (continued)

Adding further AX2022 units to the stacked array follows an identical procedure to that of attaching the first to the KPTAX2022, starting from the preparation of the enclosure (page 27). Up to four AX2022 units can be safely deployed atop the KPTAX2022, depending on the required total splay angle.

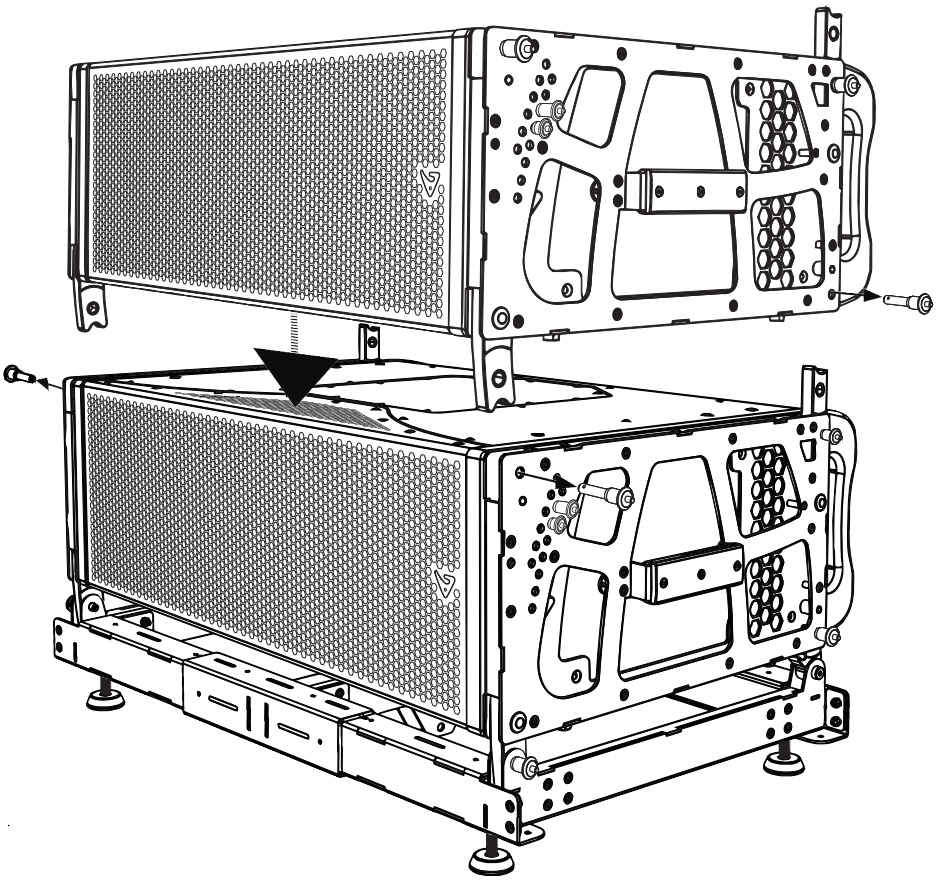

If the maximum number of four AX2022 units is deployed free-standing on the KPTAX2022, 3° is the maximum inclination for each of the four units.

MAX: KPTAX2022 + 4 AX2022 AT 3° SPLAY (12° TOTAL)

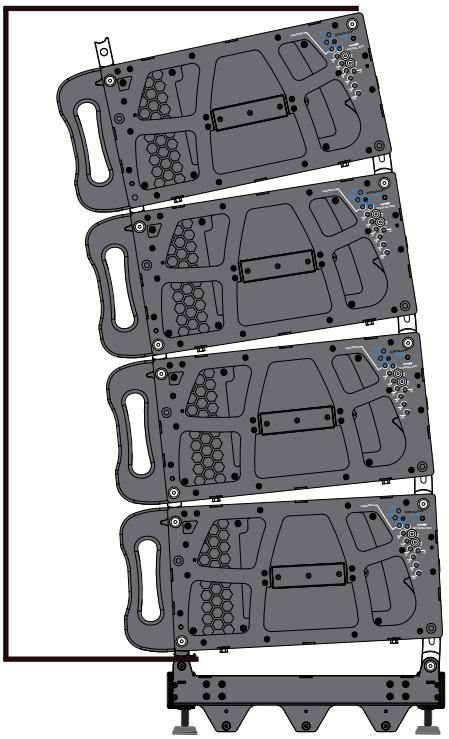

SW2421CFP – AX2022P GROUND-STACKED DEPLOYMENT

Up to four AX2022 units can be stacked atop an SW2421CFP unit in sub/satellite configurations.
If the SW2421CFP being deployed is equipped with the AXSKATESW2421 skate, it must be detached from this and positioned directly on the ground or surface. This can be done simply by removing the four locking pins – two on each side – from the bottom lugs of the subwoofer **(1)**. The skate will remain on the floor as the cabinet is lifted **(2)**.

WARNING!
Do not attempt to mount AX2022 units atop the SW2421CFP while the latter still has the skate attached. AXSKATESW2421 is not designed to maintain stability with more than just the weight and height of a single SW2421CFP attached. Doing so would create a severe toppling risk and endager persons and equipment.

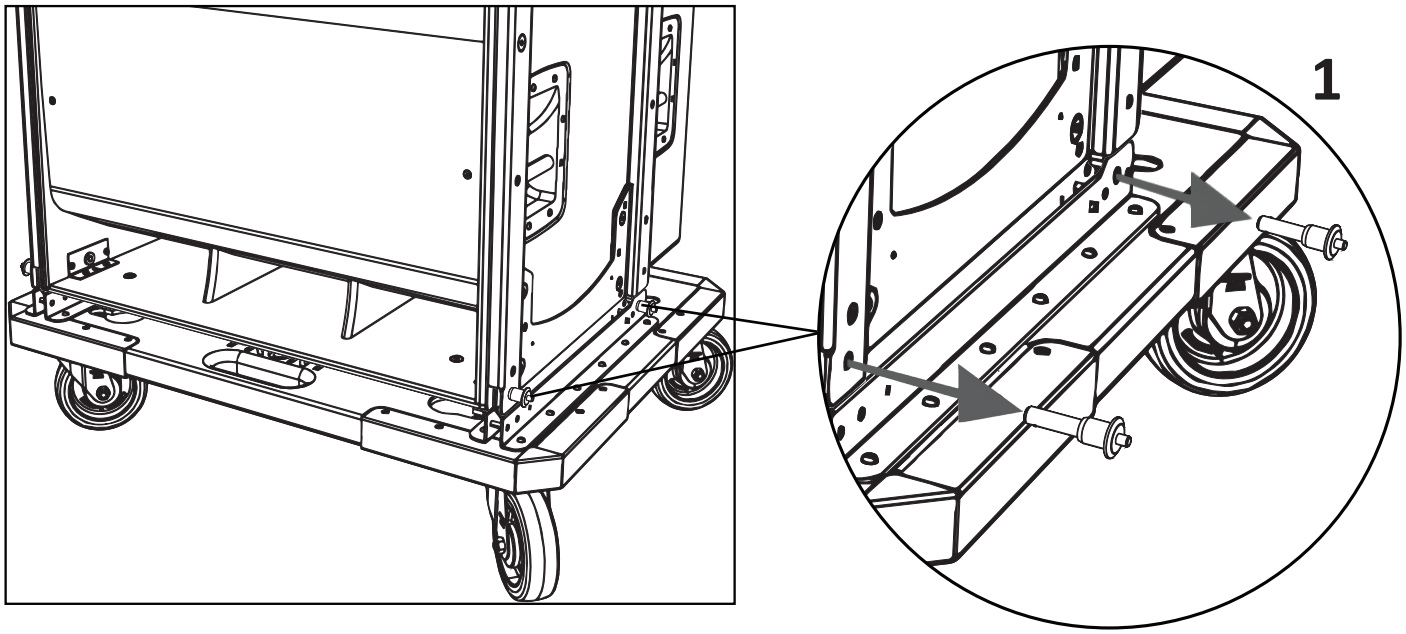

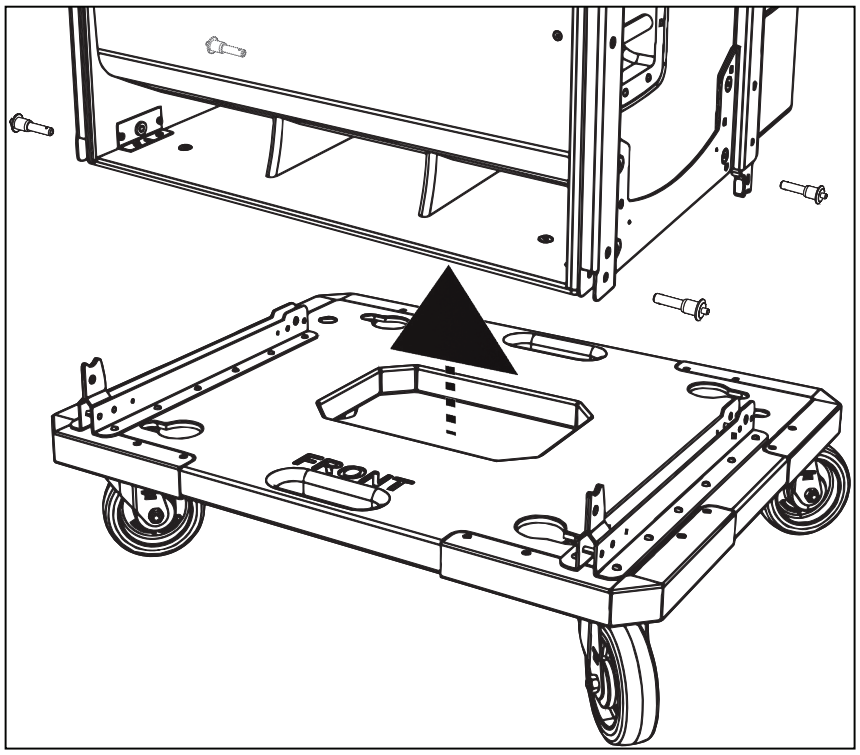

2

SW2421CFP – AX2022P GROUND-STACKED DEPLOYMENT (continued)

With the SW2421CFP in position, begin by deploying the forward extendable coupling lugs atop the SW2421CFP and locking them in place using the supplied locking pins **(2&3)**. If the rear extendable coupling lugs on each side of the bottom AX2022 are in the retracted position, remove the pins that retain these and extend the lugs completely **(4)**, locking them in the deployed position by replacing the pins **(5)**.

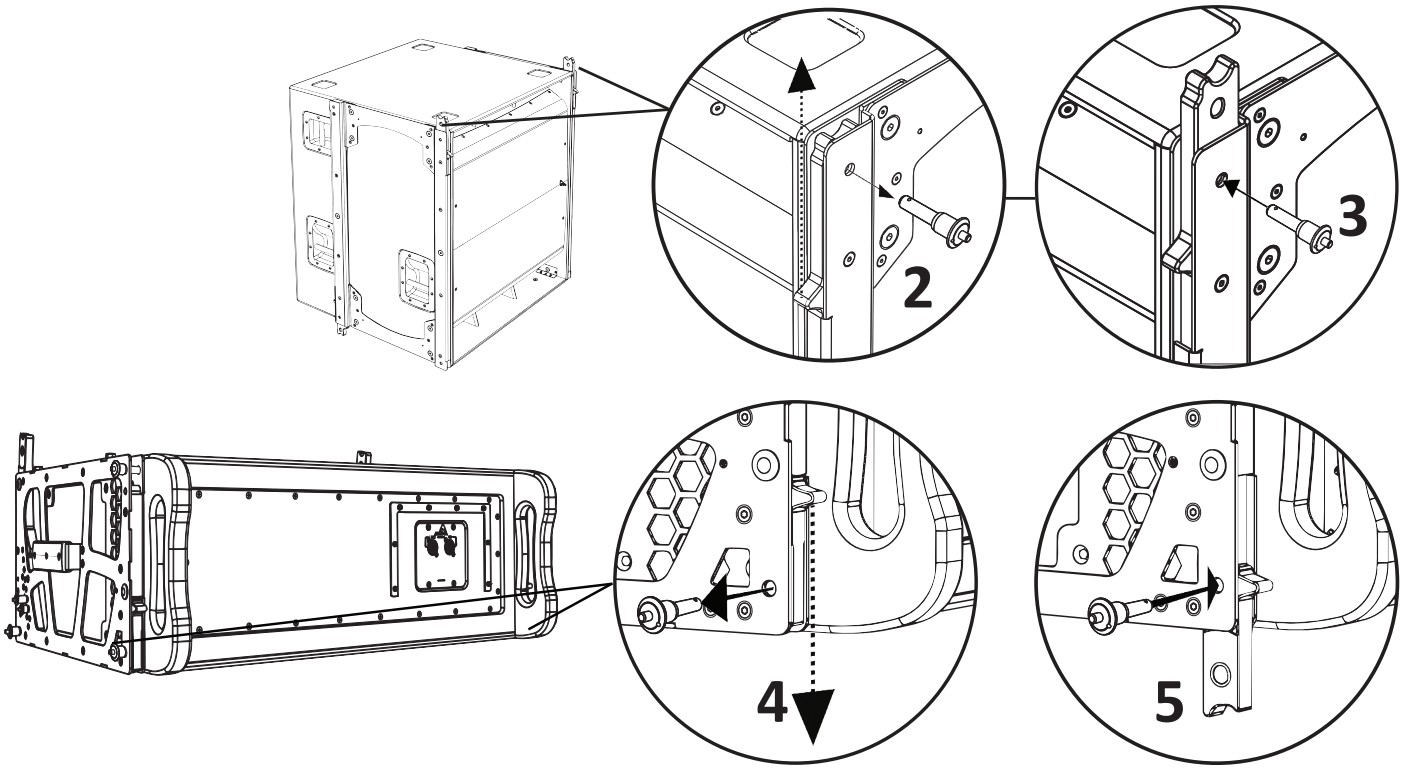

Remove also the locking pins from the bottom front lugs of the speaker **(6)**.

Lower the AX2022 onto the subwoofer, carefully aligning the four pairs of lugs so the front male lugs on the SW2421CFP enter the female lugs on the bottom of the AX2022 and the rear male lugs on the AX2022 enter the female lugs on the sub **(7)**.

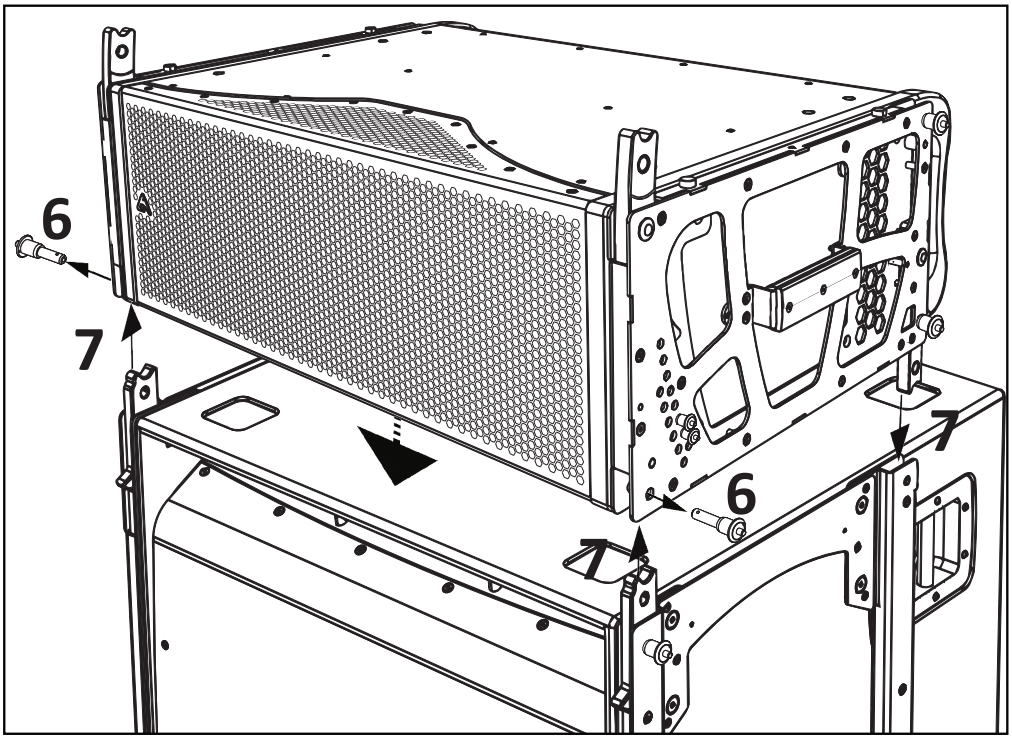

SW2421CFP – AX2022P GROUND-STACKED DEPLOYMENT (continued)

When all four pairs of lugs are mated, re-insert the pins through each set of mated lugs at the rear **(8)** and front **(9)** of the enclosure, assuring that each pin is securely locked and cannot be removed without pressing the release. When all of the couplings are secure, further AX2022 units can be added.

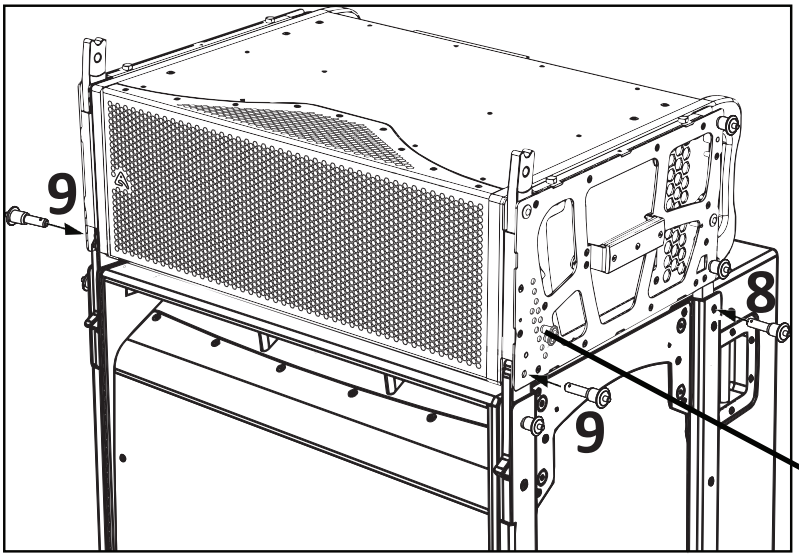

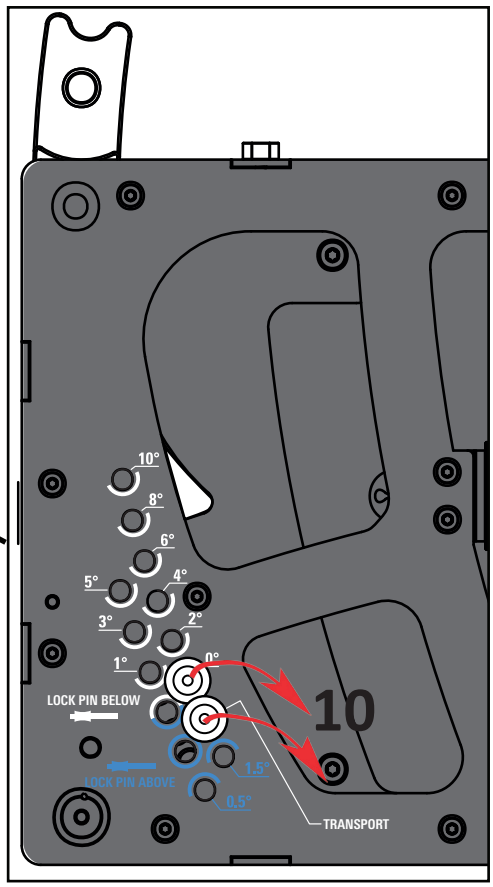

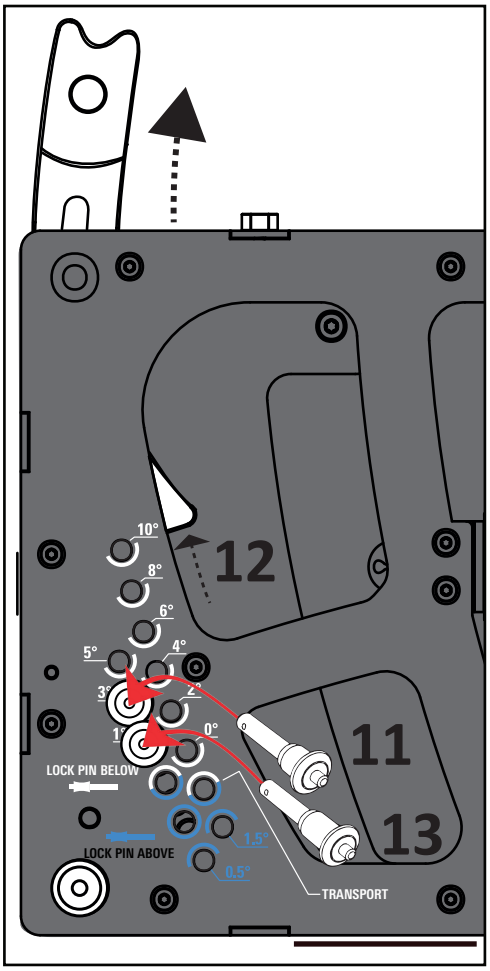

The splay angle between the first AX2022 enclosure and the SW2421CFP is fixed at 0°. The splay angles of successive enclosures are selected in an ascending manner, starting by selecting and fixing that of the first enclosure. On each side of the enclosure, remove both of the 8 mm pins **(10)**. Next, insert the shorter Type B pin into the hole that selects the angle desired **(11)** – 3° in the figure – and use the handle of the lug on the side of the enclosure **(12)** to manually lift the lug until it stops at the correct angle and **(13)** insert the longer, Type A locking pin into the correct adjacent hole (refer to the table on page 16).
Verify that the lug is solidly locked into place and that each pin is locked and cannot be removed without pressing the release.
At this point, the next AX2022 can be added.

SW2421CFP – AX2022P GROUND-STACKED DEPLOYMENT (continued)

Adding further AX2022 units to the stacked array follows an identical procedure to that of attaching the first to the SW2421CFP, starting from the preparation of the enclosure (page 31).

Up to four AX2022 units can be safely deployed atop an SW2421CFP, depending on the required total splay angle.

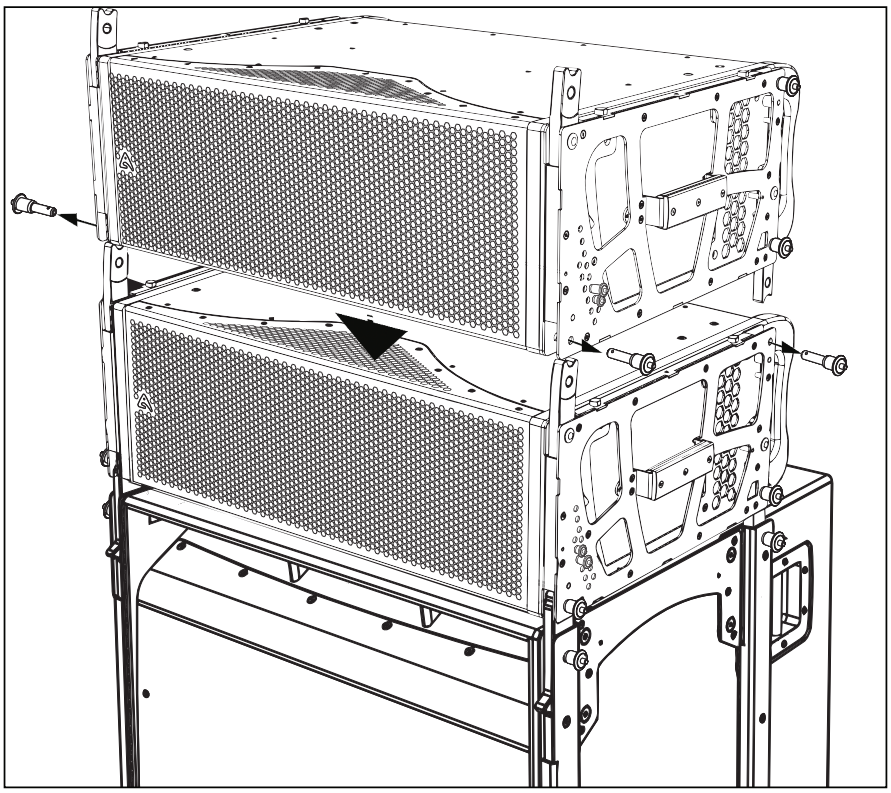

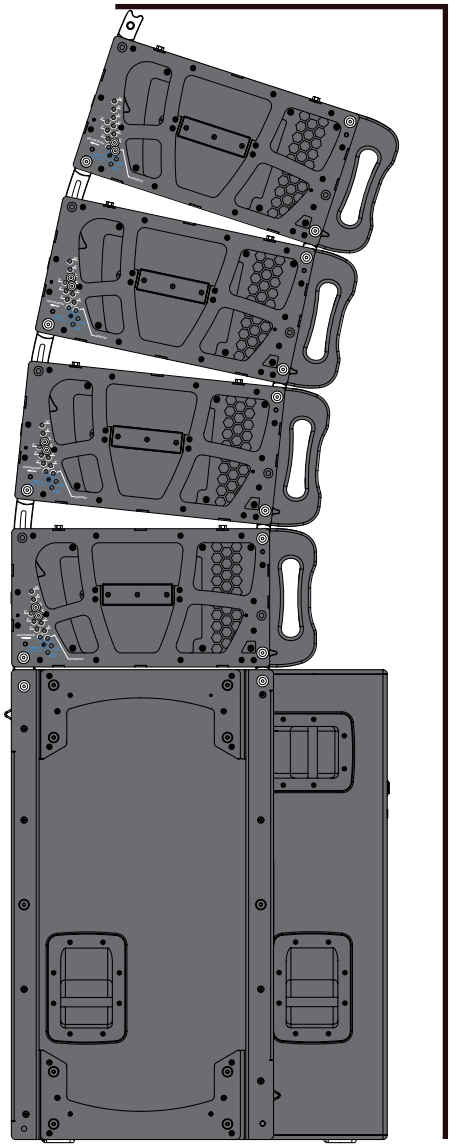

MAX:
1 SW2421CFP
+ 1 AX2022
AT 0° SPLAY
+ 3 AX2022
AT 6° SPLAY
(18° TOTAL)

If the maximum number of four AX2022 units is deployed atop an SW2421CFP, 6° is the maximum inclination for each of the three upper units.

PROCESSING PRESETS

The AX2022P enclosures require external processing to manage crossover filtering, temporal alignment and protection for all devices. This processing is provided via the DSP inside the Q-NEX+ series amplifiers, based on three basic presets. Each of these three presets is designed to provide a general starting point for specific coverage applications.

Each of the presets is included in the .gll simulation file and can be used in coverage predictions within the EASE platform. The presets are assigned to the specific amplifier channels using the onboard interface of the Q-NEX+ amplifiers or via the AXIOM AUDIA network control software.

Standard Preset

The Standard Preset **(STD)** features a slightly emphasized high-frequency response and provides processing suitable for flown arrays from 4 to 8 AX2022P units or for the central units of a longer flown array. It can be used also for stacked arrays.

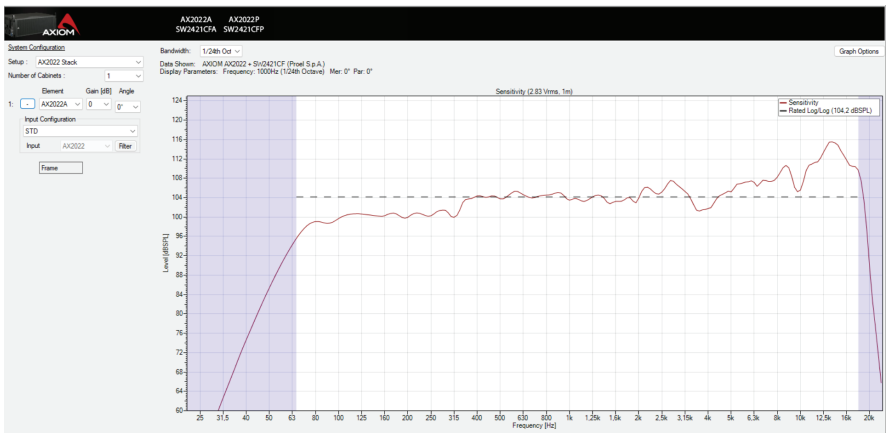

Long-Throw Preset

The **Long-Throw Preset (LHT)** features a heavily emphasized high-frequency response for processing the top enclosures in arrays longer than 6 or 8 units, in order to obtain a more even distribution of the sound pressure at longer distances.

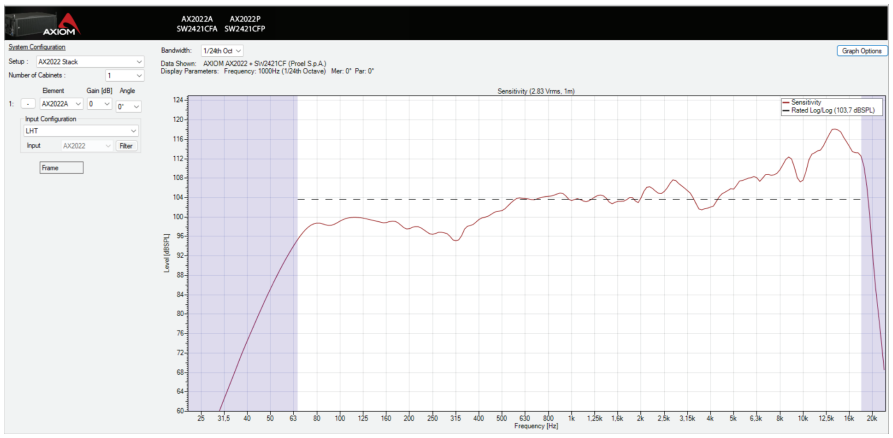

Down-Fill Preset

The **Down-Fill Preset (DWF)** provides a much smoother high frequency response for use in the bottom units of a large flown array, when these must provide coverage for the audience close to the stage. This preset is also useful when the unit is used alone as a front-fill/lip-fill element on large stages.

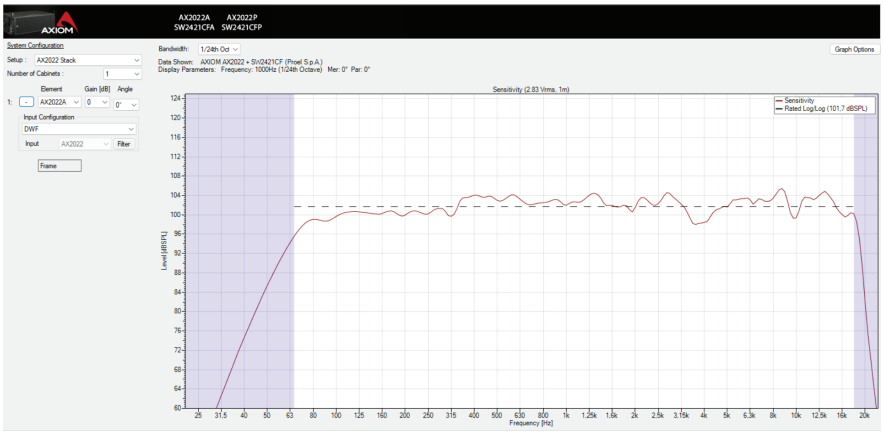

PROCESSING PRESETS (continued)

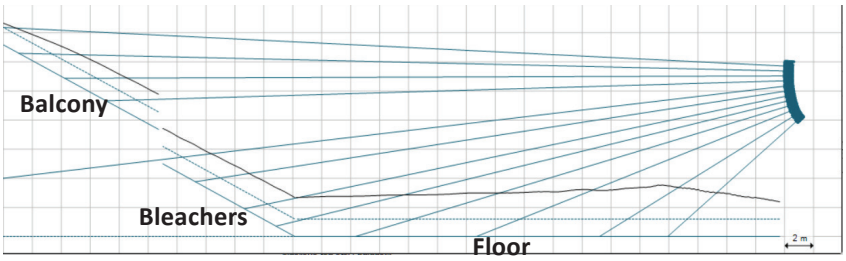

This figure shows an example of the use of the three processing presets of a 12-unit main AX2022P flown array in a mid-sized sports arena with floor, bleachers and a single balcony.
The upper three elements of the array are aimed to cover the balcony, and are configured with the Long-Throw preset.
The six central units cover the farthest area of the floor, the bleachers and the edge of the balcony. These enclosures are configured with the Standard preset.
The bottom three elements of the array are configured with the Down-Fill preset, to provide coverage for the floor nearest the stage.

Examples of other applications include floor-stacked clusters (Standard Preset), and lip-fill/front-fill deployments of single units (Down-Fill Preset).

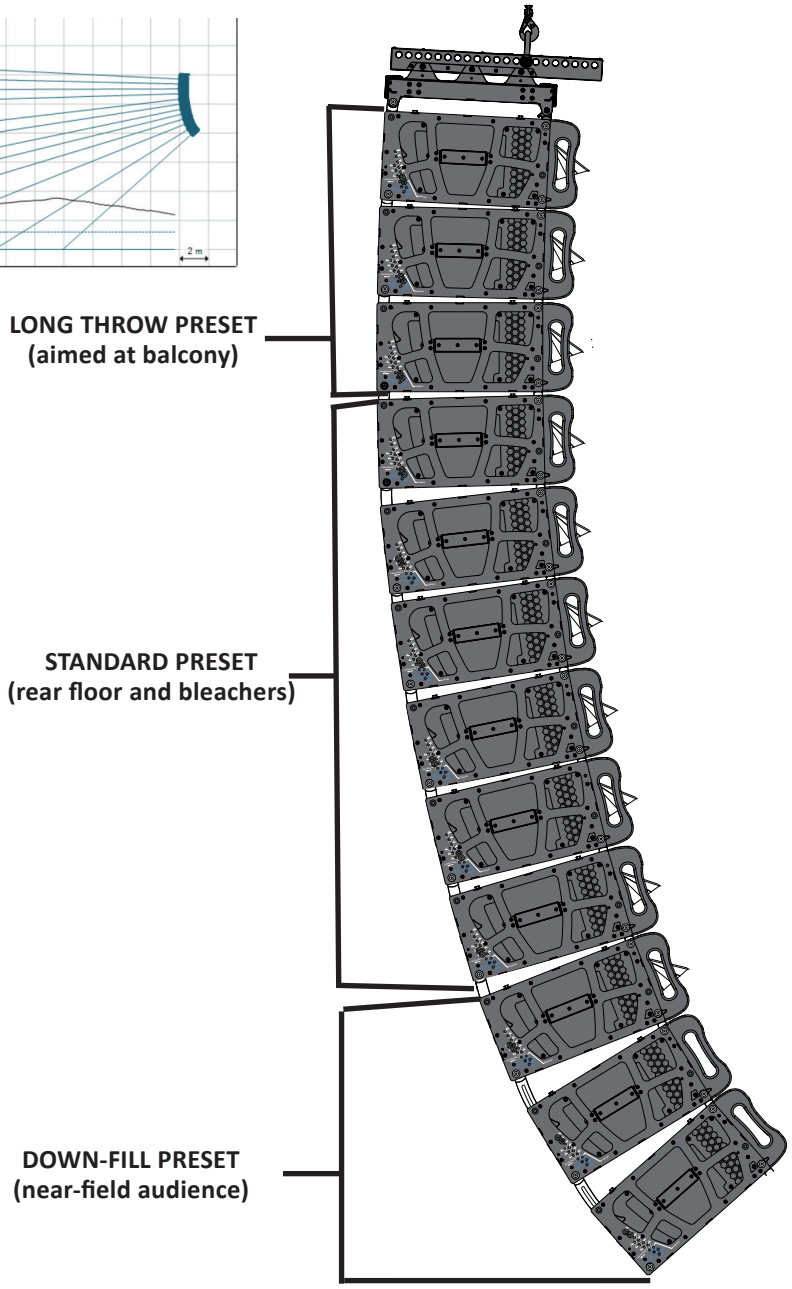

STANDARD PRESET
(stacked arrays)

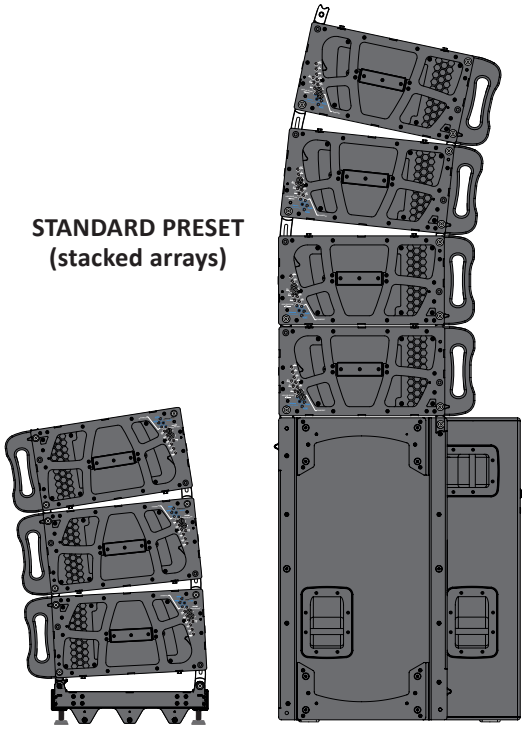

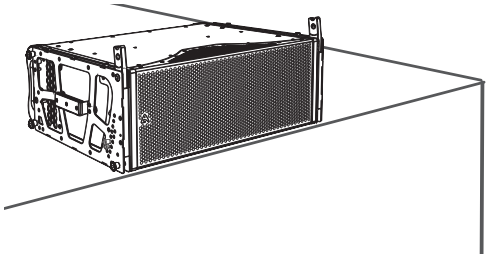

DOWN-FILL PRESET
(near-field audience)

AMPLIFICATION

AX2022P enclosures are optimized for use with Q-NEX+ series amplifiers, which include various preconfigurations for use with AX2022P units, as well as for the SW2421CP/CFP subwoofer units.
The Q-NEX+ series high-performance, 4-channel power amplifiers with advanced DSP processing are engineered for large-scale touring systems and premium fixed installations. Optimized for the entire AXIOM loudspeaker portfolio, Q-NEX+ amplifiers combine signal processing, networking capabilities, and high output power. The Q-NEX+ 20.4 delivers up to 20,000 W across four channels, while the Q-NEX+ 10.4 can deliver 10,000 W across four channels.
The integrated DSP platform provides four independent processing channels, each supporting dedicated loudspeaker tuning, alongside group-level processing for synchronized system control. Available processing functions include parametric EQ, gain adjustment, delay, polarity inversion, and channel muting.
Network connectivity is provided via dual Gigabit Ethernet ports supporting AVB/Milan audio transport at 48 kHz and 96 kHz. Each channel offers independent source selection with automatic failover between analog and network audio inputs, ensuring maximum system reliability. Milan's deterministic, low-latency architecture guarantees robust audio distribution across networked systems, while AES70 enables standardized device control, monitoring, and management over the same Ethernet infrastructure. The network connectivity of these amplifiers allows full system design, configuration, operation and monitoring from a connected PC running the AUDIA software.
Each AX2022P or parallel-linked groups of AX2022P units will require 2 independent amplifier channels. Likewise, each SW2421CP/CFP unit will require two independent channels. The larger Q-NEX20.4+ model is recommended for most applications, as it delivers sufficient power with sufficient headroom to drive up to 3 AX2022P units in parallel per each pair of channels.

The following are some typical amplification configurations for AX2022P using the Q-NEX20.4+.

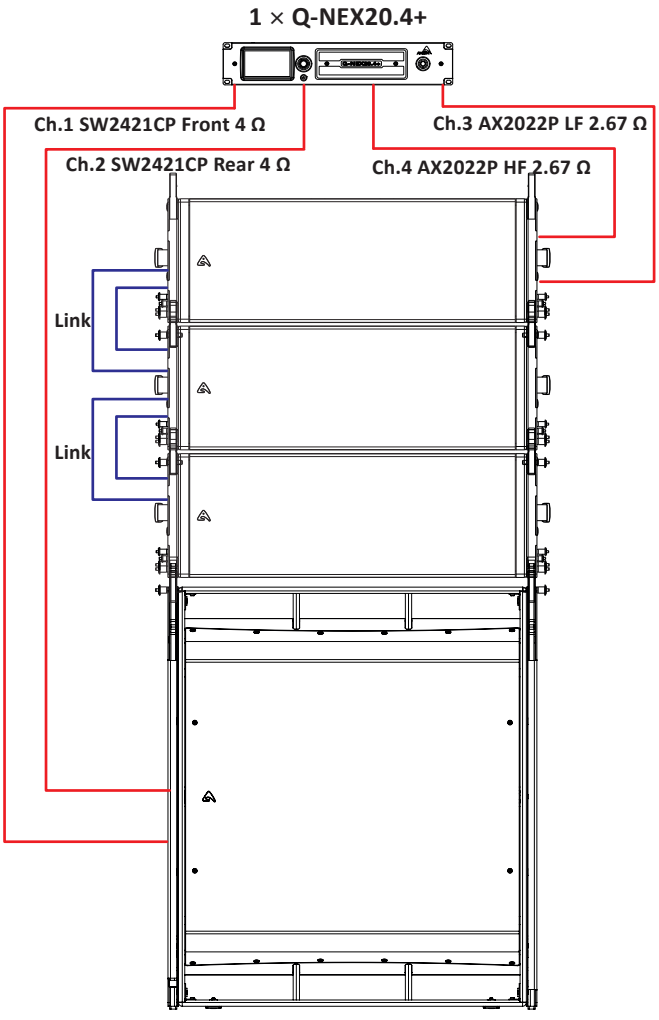

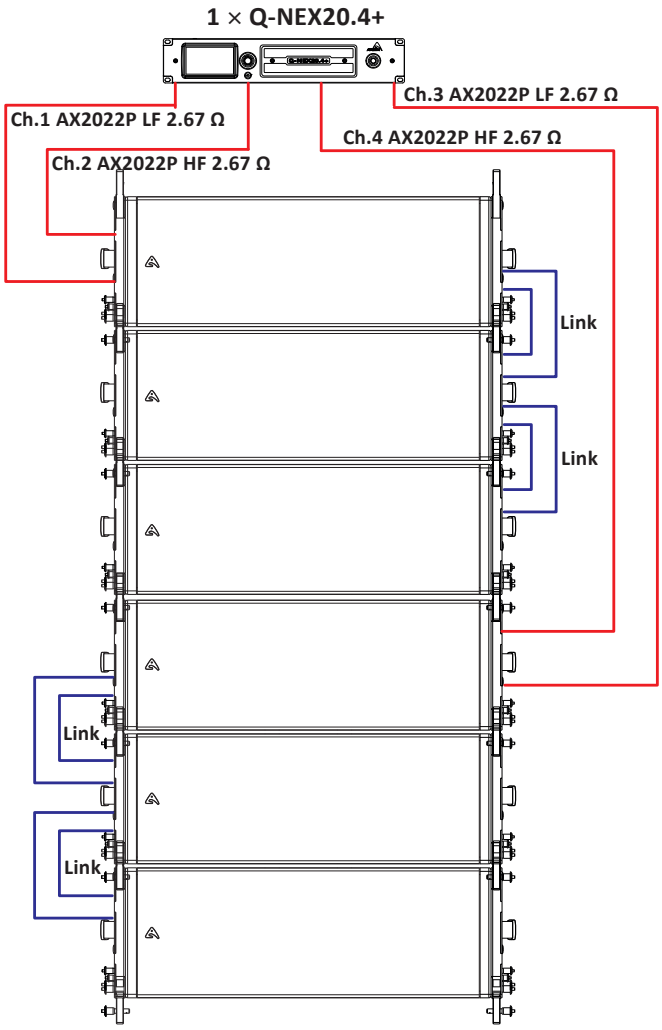

WARNING!
Before operating AX2022P systems using the Q-NEX+ amplifiers, it is necessary to read and thoroughly understand the separate instruction manual of the Q-NEX+ amplifier series.

SYSTEM DESIGN, CONTROL AND MONITORING

AUDIA

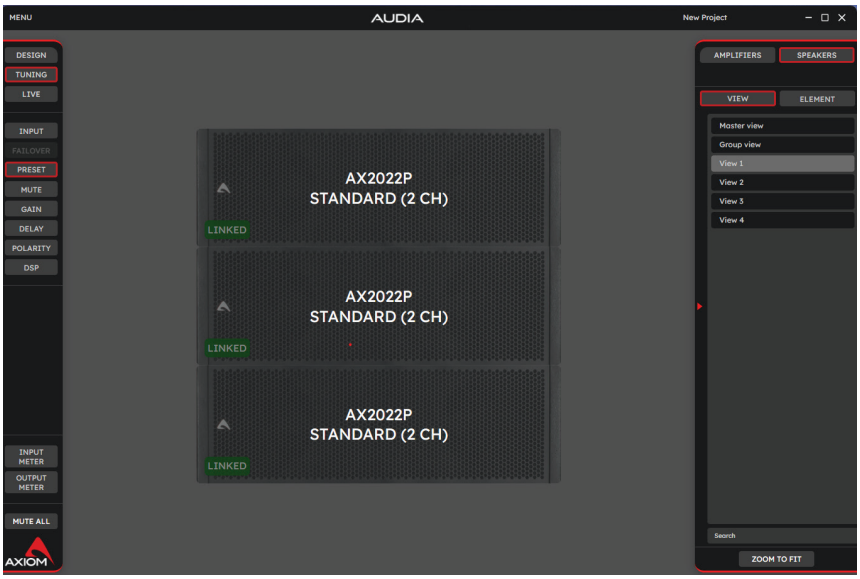

The AUDIA control software provides a PC-optimized graphical user interface that allows the user to position units and groups within the workspace in a layout that reflects their physical deployment. This visual correspondence between the software environment and real-world system topology improves clarity during setup, tuning and live operations.

The software is designed to provide comprehensive PC-based control and monitoring across a network of DSP-equipped amplifiers. Its workspace-driven architecture assists the user in the configuration of processing, group management, device monitoring, and real-time adjustment of system parameters. The interface supports both individual-unit control and group-level workflows, ensuring efficient management of complex audio systems.

With integrated real-time feedback, intuitive navigation and a scalable architecture, Audia serves as the primary control environment for the design, optimization, and operation of DSP-driven amplification networks.

Design Mode features include IP address and labeling management for active speaker enclosures, amplifier units and the passive enclosures and subwoofers driven by these. It includes control of preset configurations from manufacturer libraries, input management, and device grouping. The user can adjust input trim, levels, delays, and routing. Active devices and speakers can be organized into groups for simplified control. Projects can be saved and reloaded with full configurations. All of these functions can be carried out without virtually, before any actual DSP is connected to the network.

Tuning Mode allows rapid setup of the system on site. Elements that have been pre-arranged virtually can then linked to physical units. Amplifier synchronization modes include Online to Virtual and Virtual to Online for configuration transfer. During system tuning detailed adjustments of input, presets, gain, delay, polarity, and DSP settings are available, while EQ filters and visual monitoring are accessible.

Live Mode enables real-time control of gain, delay, and DSP parameters during operation, as well as precise system and fault monitoring.

IMPORTANT
For more information, consult the dedicated manual of the AUDIA software and AUDIA/Q-NEX+ ecosystem.